P.O. BOX 850 | COWETA, OKLAHOMA 74429 | PH. (918) 486-2189 | FAX (918) 486-5366 | www.cityofcoweta-ok.gov

AGENDA - REGULAR MEETING
COWETA PLANNING COMMISSION
COWETA CITY HALL, 310 S. BROADWAY
MONDAY, JUNE 24, 2019, 6:30 PM

I. CALL TO ORDER

II. PLEDGE OF ALLEGIANCE

III. ROLL CALL
Melanie Lander ___
Jessica Morris ___
Kathleen Robinson ___
Carter Mathews ___
Joanna Jones ___

IV. CONSENT
(All matters under the "Consent Calendar" are considered by the Planning Commission to be routine and will be enacted by one motion. Any Commissioner may, however, remove an item from consent by request.)

1. Minutes of Coweta Planning Commission Regular Meeting April 22, 2019
Approval of the minutes of the Coweta Planning Commission regular meeting held on April 22, 2019.

Documents:

PC MEETING MINUTES 04-22-2019.PDF

V. OLD BUSINESS

1. Environmental Information Document for Wastewater Treatment Facility Improvements
Discuss and possibly take action on a recommendation to the Coweta City Council and the Coweta Public Works Authority regarding the Environmental Information Document for the Proposed Wastewater Treatment Facility Improvement Project.

Documents:

190624 STAFF REPORT ON EID RECOMMENDATION.PDF
COWETA EID WITH COVER SHEET.PDF
NOTICE OF PUBLIC HEARING.PDF

VI. PLATS

1. Coweta Crossing East 300 - Phase 1
Discussion and possible action on a request by developer TJT Enterprises, LLC and engineer/surveyor J.R. Donelson, for preliminary plat approval of Coweta Crossing East 300 - Phase 1, a residential development golf community with RS-2, Residential Single Family and RM-1, Residential Multi-Family development for an area approximately 52.03 acres, more or less, located in the NW 1/4 and N/2 SW/4 and W/2 E/2 of Section 36, Township 18, North Range 15 East of the Indian Base and Meridian, City of Coweta, Wagoner County, Oklahoma.

Documents:

STAFFREP PRELIMINARY PLAT COWETA CROSSING EAST300 PC_TY.PDF
TECHNICAL ADVISORY COMMITTEE 06-06-2019.PDF
COWETAEASTPLATSHT1.PDF

COWETAEASTPLATSHT2.PDF
COWETAEASTPLATSHT3.PDF
ORDINANCE 744.PDF

2. Stonebrook
   Discussion and possible action on a request by developer, H2 Property Investments, and engineer/surveyor, Cook & Associates Engineering, Inc., for the recommendation of approval to the Coweta City Council for the final plat of Stonebrook, an RS-3, Single Family Residential, subdivision of approximately 4.848 acres, more or less, with 24 lots, generally located on the NW corner of East 151st Street South and South 285th East Avenue in Section 13, Township 17 North, Range 15 East of the Indian Base and Meridian, City of Coweta, Wagoner County, Oklahoma.

   Documents:

   STAFFREP FINAL PLAT STONEBROOK PC_TY.PDF
   190611 STONEBROOK FINAL PLAT.PDF
   190611 REVISED STONEBROOK CIVIL PLANS.PDF
   TECHNICAL ADVISORY COMMITTEE 06-13-2019.PDF

VII. NEW BUSINESS

VIII. ADJOURNMENT

IF YOU REQUIRE A SPECIAL ACCOMMODATION PURSUANT TO THE AMERICANS WITH DISABILITIES ACT, PLEASE NOTIFY CITY HALL BY 9:00 A.M. ON THE DATE OF THE MEETING.

POST OFFICE BOX 850 * COWETA, OKLAHOMA 74429. PH. (918) 486-2189 FAX (918) 486-5366 www.cityofcoweta-ok.gov

MINUTES
COWETA PLANNING COMMISSION
COWETA CITY HALL 310 S. BROADWAY
MONDAY, APRIL 22, 2019, 6:30 PM

I. CALL TO ORDER

Chairperson Melanie Lander called the meeting to order at 6:34 p.m.

II. PLEDGE OF ALLEGIANCE

III. ROLL CALL

Carter Mathews	Present
Kathleen Robinson	Absent
Jessica Morris	Present
Joanna Jones	Present
Melanie Lander	Present

Chairperson Melanie Lander requested that the roll be called and a quorum was declared to be present.

IV. CONSENT

Discussion and Consideration of the Minutes of the Regular Meeting of March 25, 2019.

Motion was made by Commissioner Carter Mathews and seconded by Chairperson Melanie Lander to approve the Minutes of the Coweta Planning Commission regular meeting held on March 25, 2019.

Motion passed by a vote of 4-0 with the following votes cast:

Carter Mathews	Yes – to approve
Kathleen Robinson	Absent
Jessica Morris	Yes – to approve
Joanna Jones	Yes – to approve
Melanie Lander	Yes – to approve

V. OLD BUSINESS

1. Discussion of the Coweta Zoning Code, Chapter 22
   A presentation was given by City Planner, Tom E. Young, Jr., regarding the policies and procedures for map and text amendments in accordance with Chapter 22 of the Coweta Zoning Code. Educational handouts were provided to each member of the Planning Commission. The handouts given were as follows: City of Coweta Rezoning Procedures and Application Packet, copies of Chapter 22 of the Coweta Zoning Code, copies of Oklahoma State Statute Title 11, Chapter 1, Article XLIII and an excel workbook “cheat sheet” of all Public Notice Requirements.

   A few questions were taken from Planning Commission members and answered to their satisfaction.

Two citizens were in attendance for this meeting, Randy and Chris Marrs. Mr. Marrs asked Mr. Young about the size requirement for public notice signs regarding zoning changes. He was not happy with the size of the sign that was posted in his neighborhood regarding a possible zoning change with the planning commission meeting date and time listed. He said it was way too small with too much information to be able to read while driving down the road. Mr. Young referred Mr. Marrs to the public notice sign requirements in Oklahoma State Statute Title 11, section 43-106. Mr. Young also attempted to display the website with recommended viewing distance and font size that he uses when designing the public notice signs, but he was not able to get the website to work on his laptop. That website is:

http://resources.printhandbook.com/pages/viewing-distance-font-size.php.

Mr. Marrs was appreciative of this information and commented that the meeting was very educational.

VI. NEW BUSINESS

VII. ADJOURNMENT

Chairperson Melanie Lander moved that the Coweta Planning Commission meeting be adjourned. There were no objections. The meeting was adjourned at 7:03 p.m.

Approved:

_____ _____

Chairman **Secretary**

_____

Date

CITY OF Coweta
POST OFFICE BOX 850 • COWETA, OKLAHOMA 74429 • PH. (918) 486-2189 • FAX (918) 486-5366 • www.cityofcoweta-ok.gov

Memorandum

To: Honorable Chairperson and Planning Commissioners
From: Wm. H. Cohrs, III, P.E.; Community Development Director
Re: Wastewater Treatment Facility Environmental Information Document
Date: June 20, 2019

BACKGROUND

At the March 25th Coweta Planning Commission Meeting, a public hearing was held to receive public comments on the Wastewater Treatment Facility Environmental Information Document (EID). David Wyatt with WDB Engineering PLC was present to present a summary of the EID. There were no public comments offered and the public hearing was closed. OWRB is working with the City on the financing of the project is now requesting a Resolution from the City approving the EID. Since the Planning Commission held the public hearing on the EID, in accordance with the Coweta Comprehensive Plan, there now needs to be a recommendation from the Planning Commission to the City Council to approve the EID.

STAFF RECOMMENDATION

The Planning Commission may either recommend approval, approval with conditions, or denial. Staff would recommend approval.

ATTACHMENTS

Public hearing Notice
EID

Environmental Information Document

Wastewater Treatment Plant Improvements

Coweta Public Works Authority

FEBRUARY 2019

FACILITY NO. S20410

OPDES PERMIT: OK0020281

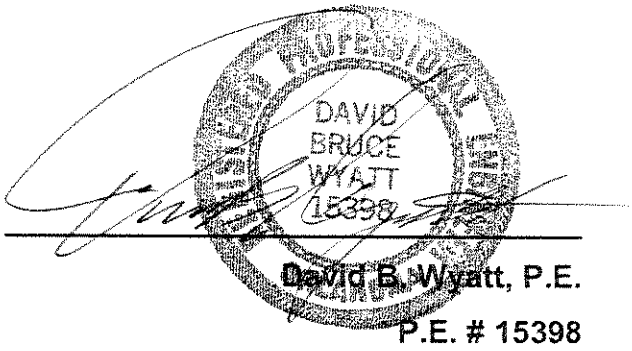

David B. Wyatt, P.E.

P.E. # 15398

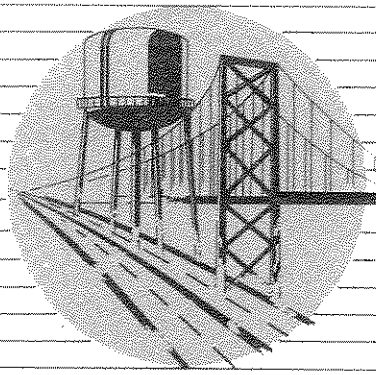

WDB ENGINEERING P.L.L.C.

6330 S.E. 74th Street
Oklahoma City, OK 73135
405-741-7090
FAX 405-741-7094

I. PROJECT SCOPE 6
II. PROJECT PLANNING AREA 7
A. Location, maps, photographs, and sketches 7
B. Growth areas and population trends 8
C. Current and projected water use data/ wastewater flow projections 8
D. Environmental concerns in the service area 10
E. Community engagement 10
III. EXISTING FACILITIES AND NEED FOR PROJECT 11
A. Location and layout 11
B. Condition of existing facilities 11
C. Health and safety 14
D. System O&M 14
E. Growth capacity 15
F. Water system availability 15
IV. ALTERNATIVES CONSIDERED 16
A. Summary of alternatives considered 16
B. Alternative development process discussed 16
C. System Mapping 19
V. ENVIRONMENTAL IMPACTS OF SELECTED ALTERNATIVE 20
A. Formally classified land 20
B. Important farmland 20
C. Floodplains 21
D. Wetlands 22
E. Historic properties 22
F. Native American historic consultation 23

G. Biological resources 23

H. Water quality, air quality, transportation, noise, scenic rivers, etc. 27

I. Socio-economic issues 28

J. Environmental due diligence 29

K. Local governmental review 29

L. Effects on environmental resources of the selected alternative 29

VI. CORRESPONDENCE AND PUBLIC PARTICIPATION 31

VII. SUMMARY OF MITIGATION MEASURES 32

Schedule of Attachments

1. City of Coweta WWTP Location Map
2. Population Projections
3. Summary of Discharge Flow Monitoring, Jan. 2017 – Sept. 2017
4. Existing WWTP Layout
5. Existing WWTP Process Flow Schematic
6. OPDES Permit No. OK0020281
7. FACT Environmental Effects Matrix
8. Alternative 1 Cost Estimate
9. Alternative 2 Cost Estimate
10. Alternative 3 Cost Estimate
11. Proposed WWTP Layout
12. US Fish and Wildlife Service (USFWS) Correspondence
13. Oklahoma Tourism and Recreation Department Correspondence
14. US Department of Agriculture (USDA) Natural Resources Conservation Service (NRCS) Correspondence
15. NRCS Web Soil Survey Map
16. Federal Emergency Management Agency (FEMA) Flood Insurance Rate Map (FIRM)
17. Oklahoma Water Resources Board (OWRB) Water Management Division Correspondence
18. FEMA Region 6 Mitigation Division Correspondence
19. Wagoner County Floodplain Administrator Correspondence
20. City of Coweta Floodplain Administrator Correspondence
21. US Army Corps of Engineers (USACE) Water Management Branch Correspondence
22. USACE Regulatory Branch Correspondence
23. Oklahoma Historical Society (OHS) Correspondence
24. Oklahoma Archeological Survey (OAS) Correspondence
25. Bureau of Indian Affairs (BIA) Correspondence
26. Muskogee (Creek) Nation Environmental Services Correspondence

27. Oklahoma Department of Environmental Quality (ODEQ) External Affairs Correspondence
28. Grand River Dam Authority (GRDA) Correspondence
29. US Environmental Protection Agency (EPA) Environmental Justice Screening Report
30. Indian Nations Council of Governments (INCOG) Correspondence

I. PROJECT SCOPE

The Coweta Public Works Authority (CPWA) owns and operates a wastewater treatment plant (WWTP) that serves the residents of the City of Coweta. The WWTP utilizes flow-through lagoons equipped with mechanical aeration followed by a polishing pond and disinfection basin.

The City is projected to grow at a pace exceeding the state average for the next 20 years. The current WWTP is not configured or equipped to provide adequate treatment for the increased flow associated with population growth. Improvements to the treatment process are necessary to maintain compliance with state and federal regulations.

The proposed project consists of modifying and upgrading the existing Coweta WWTP to accommodate an average daily flow up to 1.5 MGD. The proposed project includes: a new influent lift station; lagoon system improvements; aeration basin improvements; two (2) new aerobic sludge digesters; a new flow equalization basin; two (2) new secondary clarifiers; an activated sludge pump station; sludge drying beds improvements; and disinfection basin modifications. Some of the units in the existing WWTP will be rehabilitated and repurposed once the new WWTP is in operation. Other existing portions will be abandoned. Elements of the proposed project have been sized or configured for expandability to accommodate increased future wastewater flow.

The estimated cost for the proposed project is $11.11 million. The City will apply for external funding from the Oklahoma Water Resources Board or local bond issue. The estimated construction completion date is mid to late 2020 with compliance attained by January 1, 2021.

II. PROJECT PLANNING AREA

A. Location, maps, photographs, and sketches

The City of Coweta is located in Wagoner County in east central Oklahoma, southeast of the City of Tulsa, Oklahoma. The location of the existing WWTP is shown in Figure 1 below. Attachment 1 includes a map with satellite photography of the WWTP showing its relation to the City of Coweta.

Figure 1. Location of Coweta WWTP

B. Growth areas and population trends

The current (2017) population of the City of Coweta is approximately 11,120. See Attachment 2 for the actual population of the City of Coweta from 1910 through 2010, and projected populations trendlines that use different projection methods.

The population projection method presented in Appendix A of the *Guidelines for Engineering Reports for Wastewater Projects (2016)* prepared by the Oklahoma Funding Agency Coordinating Team (FACT), yields an annual growth rate of 3.37%. If this method is used, the 2050 projected population for the City of Coweta would be 37,414, tripling the population over 30 years. Further, the 2070 projected population would be 72,577, almost doubling the 2050 population. The available land (11.14 square miles), and existing population density trends for the area do not support the FACT method population projection.

The *2012 Demographic State of the State Report, Oklahoma State and County Population Projections through 2075,* presented an annual growth rate of 1.51% over a 65-year period from 2010 through 2075 for Wagoner County. The linear growth trendline did not fit the existing population growth as well as other methods.

Using the historical census data for the City of Coweta from 1960 – 2010, and applying a 2nd-order polynomial trendline, the projected population for the year 2040 and 2060 is 16,908 and 22,852, respectively. The design will be based on an overall population of 17,000 for 20-year design life or 23,000 for the 40-year design life.

C. Current and projected water use data/ wastewater flow projections

The 2017 estimated population is 11,120, however, not all residents are served by the existing system. The system currently serves 3,328 customers. The majority (more than 90%) of the customers are residential and the remainder are a mix of commercial and retail customers. See Table 1 for current customer classification.

Table 1. Coweta User Classifications (2017)

Description of 2017 User Classification	Number of Customers
Residential Customers Served by Coweta WWTP	3,087
Non-Residential Customers Served by Coweta WWTP	241
Residential Customers served by other WWTP	155
Total Sanitary Sewer Customers	3,483

Flow projections were based on the customer data and influent/ effluent flow data provided by the City. Assuming 2.5 persons per sanitary sewer connection for 3,087 connections yields a served population of 7,718. *OAC 252:656-5-1(2)* recommends designing for an average flow of 100 gallons per capita per day (gpcd). A served population of 7,718 at 100 gpcd yields 0.772 million gallons per day (MGD). For the 241 non-residential customers, a flow rate of 500 gpcd was used for an average daily flow of 0.122 MGD. Combining the residential and non-residential flows yields a recommended flow rate of 0.894 MGD.

The recommended flow rate of 0.894 MGD is higher than the 2017 average influent/ effluent flows, which were 0.725 MGD and 0.794 MGD, respectively. The effluent flow data at the WWTP for January through September 2017 is shown in Table 2. See Attachment 3 for a full summary of discharge flow monitoring during this period.

Table 2. Summary of Effluent Flow from the Coweta WWTP (Jan. 2017 – Sept. 2017)

	WWTP Effluent Flow, MGD	
	Monthly Average	Daily Maximum
Mean	0.744	0.794
Median	0.653	0.664
Maximum	1.329	2.416
Minimum	0.473	0.400

The 2017 flow values are equivalent to 78.3 gallons of influent per day per “sewered capita” and 87.3 gallons of effluent per day per “sewered capita.”

For the design year of 2040, the projected total population is 17,000. For the projected flow in 2040, the system will serve an estimated “sewered population” of 13,500 and 300 non-residential customers. Using 100 gpcd for the “sewered population” and 500 gpcd for non-residential customers yields an average design flow of 1.5 MGD.

The flow in the OPDES Permit is based on 0.76 MGD. Therefore, changing the flow-basis of the OPDES Permit will be necessary. The daily maximum design flow will be 3.0 MGD and the design hourly peak flow will be 3.75 MGD. However, flow in excess of 1.5 MGD will be diverted to an equalization basin to effectively dampen the influence of peak flow events on the treatment process.

D. Environmental concerns in the service area

Adverse environmental impacts resulting from the proposed project are not expected. On the contrary, the proposed project will bring the WWTP into compliance with DEQ’s construction standards and enable it to comply with the conditions of the OPDES Permit consistently. Further environmental considerations are discussed in the following sections.

E. Community engagement

The CPWA plans to engage the community in the planning process by holding a public hearing to present the alternatives and recommendations presented in this report. Public input will be encouraged at this meeting. Community engagement plans are discussed further in the following sections.

III. EXISTING FACILITIES AND NEED FOR PROJECT

A. Location and layout

The Coweta WWTP is located in the SW/4, Section 30, Township 17 North, Range 16 East of the Indian Meridian in Wagoner County, Oklahoma. The location of the WWTP in relation to the City of Coweta is shown in Attachment 1. The layout of the existing WWTP is shown in Attachment 4.

B. Condition of existing facilities

For the following discussion, refer to the existing process flow schematic provided in Attachment 5. Wastewater from the City of Coweta enters the influent lift station via a 24-inch gravity line that is fed by an existing 24-inch gravity sewer main. The gravity main also accepts flow from an existing 8-inch force main at the plant site from the sanitary sewer collection system. The wastewater is then pumped from the influent lift station, located approximately at latitude: 35°55'21.58"N, longitude: 95°39'6.62"W, to the influent distribution box that contains a manual bar screen and flow rate monitoring weir at the west edge of the aeration basins.

The influent distribution box directs the influent to either or both of the aeration basins. The aeration basins are earthen basins, each of which has a 12-inch thick clay liner that extends to the top of the aeration embankments (Elev. = 592.00' MSL). In addition, each aeration basin has a concrete splash pad/ apron at each inlet and outlet pipe location to prevent erosion. Mechanical aeration is provided by six (6) 15-HP floating aerators with four (4) in Cell 1 and two (2) in Cell 2. Mixed liquor from the aeration basins comes together in the discharge structure of the either Cell 1 or Cell 2 depending on the selected mode of operation for the plant. Mixed liquor is then discharged to Cell 3, via gravity pipe network, that acts as a sedimentation basin or polishing pond. Cell 3 has a side-wall depth of 17 ft. Supernatant from Cell 3 flows to the disinfection basin. The disinfection basin is baffled to provide a consistent flow with no short circuiting. The disinfection basin was designed for disinfection using sodium hypochlorite and dechlorination by sodium bisulfite. Effluent flow is measured using a 12-inch magnetic flow meter installed within

a segment of 12-inch ductile iron pipe between the chlorine contact basin and dechlorination basin. A rectangular, sharp crested weir is located between the discharge of the 12-inch pipe and the basin's 18-inch outfall piping. Compliance samples are taken downstream of the dechlorination injection point, prior to the weir that leads to the basin's outfall.

The sizes of various units at the existing WWTP are given in Table 3.

Table 3. Existing Coweta WWTP Unit Sizes

Treatment Process (units)	Value
Aeration lagoon volume, (2) each, ft^3 (gal)	1,375,476 (9.75 MG)
Sedimentation lagoon volume, ft^3 (gal)	240,640 (1.80 MG)
Sedimentation lagoon surface area, ft^2	34,400
Sedimentation lagoon side-wall depth, ft	15
Chlorine contact basin volume, ft^3 (gal)	2,800 (21,178)

The following paragraphs summarize the condition of the existing WWTP.

The WWTP is equipped with influent flow measurement. Influent flow is measured by Cipolletti weir with an upstream ultrasonic flow sensor (Badger Meter, Model 2100R).

The WWTP is equipped with facilities to remove screenings. However, the screen cleaning process is manual in nature. The influent is screened by allowing the incoming gravity sewer to flow through a "screening basket" prior to entering the wet well of the influent lift station. The screening basket must be hoisted 24 feet vertically through an access hatch by use of an electric hoist before it can be manually dumped into a collection bin. Following dumping, the screening basket must be washed down. The screening basket must then be lowered back into position for continued function. The process occurs daily or more frequently.

An additional manual bar screen exists in the influent distribution box. Cleaning this bar screen is also a manual process. It requires WWTP personnel to manually "rake" the

screen, discard screenings, and wash down the bar screen daily or more frequently. There is no point of disposal near this structure, so any screened material must be transported to a dumpster on site prior to ultimate landfill disposal.

The WWTP is not currently equipped with facilities to remove grit. The influent is pumped to the distribution box and flows by gravity through the remainder of the plant to the outfall. Since there are no pumps downstream of the existing influent lift station, the necessity for grit removal to protect mechanical units downstream is not essential, however, build-up of grit in the aeration basins will occur, requiring removal in this project.

There is no wet-weather flow equalization basin (FEB) currently available at the plant. All flow is currently pumped to the influent distribution box upon entering the influent lift station. The excess volume that enters the aeration lagoons is detained slightly by flow restrictions of the connecting pipes between cells. Thus, a portion of Cell 1 and Cell 2 act as flow equalization basins as wastewater flows through the treatment train.

The WWTP is equipped with two aeration lagoons, Cells 1 and 2, normally operated to function in series. Neither aeration basin is fully lined with concrete, asphalt or an equivalent material below the maximum water elevation. Four (4) surface aerators (15 HP) are in place in the northern lagoon, Cell 1. The southern aeration lagoon, Cell 2, is equipped with two (2) surface aerators (15 HP).

The WWTP is not currently equipped with secondary clarifiers. Cell 3 is designed to act as a polishing pond. However, it is not equipped for scum collection and/or removal. The side-wall depth of Cell 3 is 17 ft with 3 ft of freeboard, which meets the minimum standard of 12 ft to limit filamentous (blue-green) algal growth on the surface. There are periods of the year where algal growth is present on the surface of Cell 3 and can lead to spikes in BOD_5 and TSS concentrations in the effluent.

The WWTP is not equipped with facilities for sludge stabilization. Sludge is held in the aeration lagoons (Cells 1 and 2) and Cell 3. There is a drain system in place that may be used to drain each of the cells back to the influent lift station via gravity piping. Once the lagoon is dried, sludge can be removed from the lagoons and disposed at a landfill.

The WWTP is equipped with a single chlorination basin equipped with internal baffle walls. The chlorination system is currently operational. The chlorination basin has a contact time of approximately 40.0 minutes at the OPDES design flow of 0.76 MGD. The stated maximum design flow rate for the disinfection basin is 1.5 MGD. A system to meter chlorination and dechlorination solutions to the basin is in place.

The effluent flow measurement device, a magnetic flow meter placed in the 12-inch ductile iron pipe at the discharge of the disinfection basin, is located between the outfall of the chlorination basin and the dechlorination chamber.

C. Health and safety

The flow-through aerated lagoon system has worked satisfactorily with few exceedances of the OPDES discharge permit. Due to the growth of the community, the existing WWTP is not capable of meeting the effluent limits of a revised OPDES Permit. Therefore, the effluent generated will not protect Oklahoma's Water Quality Standards and may cause harm to the environment and the public. A new wastewater treatment plant with an initial capacity of 1.5 MGD is proposed. Treatment plants designed to handle flow at or above 1.0 MGD are classified as a "Major" Municipal Wastewater Treatment Facilities and are required to meet the Whole Effluent Toxicity (WET) testing criteria. A flow-through lagoon system is incapable of consistently meeting WET limits, and a mechanical / biological treatment process is necessary to meet the WET limits and maintain the aquatic quality of the stream.

D. System O&M

The influent lift station and lagoons/ aeration basins for the WWTP were constructed in 1994. The two manual bar screens in place at the wet well of the influent lift station and the influent distribution box are acceptable for the current plan but do require daily maintenance to work properly. Maintenance to keep it operating will become increasingly expensive. The lack of a sludge holding facility creates an issue with maintaining operations during the sludge removal process.

E. Growth capacity

The existing aerated lagoon plant was designed in 1993 for an average flow of 0.90 MGD, and peak flow of 3.0 MGD. The OPDES Permit presents an allowable average flow of 0.76 MGD, shown in Attachment 6. The original design organic capacity of the plant was for 200 lb of BOD_5 demand per day. Based on the present and projected populations, the hydraulic capacity of 0.90 MGD and an organic loading of 200 mg/L BOD_5 for the design population of 9,000 was appropriate through the design period of 20 years or the year 2012. However, per the 2010 decennial census, the population of Coweta is 9,943. The estimated 2017 population of Coweta is 11,120, of which approximately 7,718 are currently served by sanitary sewer.

There have been several (49) exceedances of permit limits reported since 2007. The majority (29 of 49) of permit limit exceedances are for the concentration of biological oxygen demand, 5-day, 20 deg C (BOD_5) parameter for weekly (8) or monthly (21) averages. Lack of secondary clarification with scum removal may be one cause of increased organics creating increased concentration of BOD_5 and TSS in the final effluent. The current final effluent limits in the OPDES Permit are given in Attachment 6.

F. Water system availability

Potable water is provided to the chemical feed building and the rest of the plant site by the City of Coweta's public water supply (PWS). The chemical feed building is equipped with a reduced pressure zone (RPZ) backflow preventer to protect potable water supply from back flow and back siphonage.

IV. ALTERNATIVES CONSIDERED

A. Summary of alternatives considered

The following alternatives were considered:

- Construct a New WWTP
- Upgrade the Existing WWTP
- Construct a New Sequential Batch Reactor (SBR) WWTP
- Do-Nothing

B. Alternative development process discussed

Each alternative was evaluated using the FACT Environmental Effects Matrix, see Attachment 7. The development of each alternative is summarized below.

1. Construct a New WWTP

Description. This alternative involves the construction of a new extended aeration activated sludge WWTP to replace the existing WWTP, after which the existing WWTP will be closed. Constructing a new WWTP will include the following: influent flow measurement, headworks, two (2) aeration basins, two (2) secondary clarifiers, modifying the existing disinfection unit, one (1) flow equalization basin, two (2) aerobic sludge digesters, and a multi-celled sludge drying bed.

Environmental Impacts. Adverse environmental impacts are not expected. The environmental categories in Attachment 7 will either not likely be affected by the proposed project or are not applicable.

Land Requirements. Utilization of additional, available land will be required so that the construction of the new WWTP will not interfere with the operation of the existing WWTP. No additional real estate acquisition is expected for the alternative as the City of Coweta/ Coweta Public Works Authority holds sufficient property to accommodate this expansion.

Construction Problems. Construction problems are not anticipated. However, sufficient contingency budget should be maintained to correct any unknown or unexpected issues as they arise.

Cost Estimates. The estimated construction cost for Alternative 1 is $11.50 million. The detailed cost estimate is in Attachment 8.

Advantages/ Disadvantages. The advantages of a new extended aeration activated sludge WWTP include: a proven track record in Oklahoma, ease of operation, and the ability to meet WET limits. Additionally, the construction cost is less than that for Alternative 3. The disadvantages of this alternative include: a new or larger site will be needed on which to construct the new WWTP to keep the existing WWTP in operation during construction, and construction of new units is more expensive than modifying existing units. Additionally, O&M for extended aeration is higher due primarily to the power consumption from running blowers.

2. Upgrade the Existing WWTP

Description. This alternative involves modifying and upgrading the existing WWTP to be a modified extended aeration activated sludge WWTP. Some new units will be constructed since the existing WWTP either lacks analogous units or the existing units cannot be modified to conform to current construction standards. During construction, the existing WWTP will continue to operate. Upgrading the existing WWTP will include: the construction of a new influent lift station; converting Cell 1 into five (5) concrete-lined basins with reinforced concrete partition walls consisting of two (2) aeration basins, two (2) aerobic sludge digesters, and one (1) flow equalization basin; constructing two (2) new secondary clarifiers; constructing an activated sludge pump station; constructing sludge drying beds; and modifying the existing disinfection basin.

Environmental Impacts. Adverse environmental impacts are not expected. The environmental categories in Attachment 7 will either not likely be affected by the proposed project or are not applicable.

Land Requirements. Utilization of additional, available land will be required so that the construction of the new WWTP will not interfere with the operation of the existing WWTP. No additional real estate acquisition is expected for the alternative as the City of Coweta/ Coweta Public Works Authority holds sufficient property to accommodate this expansion.

Construction Problems. Construction problems are not anticipated. However, sufficient contingency budget should be maintained to correct any unknown or unexpected issues as they arise.

Cost Estimates. The estimated construction cost for Alternative 2 is $11.11 million. The detailed cost estimate is in Attachment 9.

Advantages/ Disadvantages. The advantages of this alternative include the familiarity of the operations staff with the extended aeration activated sludge technology, the existing site will be adequate for construction of the upgraded WWTP, and many of the existing units will be modified and reused or re-purposed. In addition, the estimated cost is lower than that of Alternatives 1 and 3. This alternative also allows for increased, future treatment capacity with the addition or modification of only a few treatment units: a third secondary clarifier, additional blower(s) and disinfection modification/ expansion. The disadvantage of this alternative is that even though existing units will be rehabilitated, the age of the structures themselves may result in increased maintenance expenses in the future.

3. Construct a New Sequential Batch Reactor (SBR) WWTP

Description. The alternative involves the construction of a new sequential batch reactor (SBR) WWTP. An SBR is significantly different in configuration and operation than the standard extended aeration activated sludge system in Alternatives 1 and 2. An SBR unit consists of two (2) or more basins, that alternately fill, treat, settle (clarify) and discharge in a batch-wise manner. In the case of Coweta, three (3) SBR basins are proposed. The SBR system does not utilize separate clarifiers since clarification takes place in each SBR basin. The SBR completes all unit process treatment steps within the reactors, eliminating the need for anaerobic or anoxic zones, RAS systems, and secondary clarifiers.

Environmental Impacts. Adverse environmental impacts are not expected. The environmental categories in Attachment 7 will either not likely be affected by the proposed project or are not applicable.

Land Requirements. Utilization of additional, available land will be required so that the construction of the new WWTP will not interfere with the operation of the existing WWTP. No additional real estate acquisition is expected for the alternative as the City of Coweta/ Coweta Public Works Authority holds sufficient property to accommodate this expansion.

Construction Problems. Construction problems are not anticipated. However, sufficient contingency budget should be maintained to correct any unknown or unexpected issues as they arise.

Cost Estimates. The estimated construction cost for Alternative 3 is $12.50 million. The detailed cost estimate is in Attachment 10.

Advantages/ Disadvantages. The advantages of this alternative include the compact nature of the system, its relatively small footprint, and the fact that secondary clarifiers will not be needed. The disadvantages include a higher cost than for Alternatives 1 and 2 and the unfamiliarity of some of the operations staff with this technology.

4. No Action

This alternative involves leaving the WWTP in its current condition. Without improvements to capacity, the WWTP will become overloaded, which will increase the likelihood of violating the discharge effluent limits of the OPDES Permit. A no-action alternative is not feasible due to the growing population and critical need for expanded wastewater treatment capacity. A no-action response is not given further consideration.

C. System Mapping

The proposed project includes the mapping of existing and proposed facilities. See Attachment 11 for the location and mapping information for the proposed project.

V. ENVIRONMENTAL IMPACTS OF SELECTED ALTERNATIVE

The selected alternative for the proposed project is Alternative 2 – Upgrade the Existing WWTP. The following discussion details the correspondence and findings from the environmental review of the proposed project. See Attachment 7 for the Environmental Effects Matrix.

A. Formally classified land

The United States Department of the Interior Fish and Wildlife Service (USFWS) was contacted regarding the proposed project. In a letter dated January 31, 2019, the USFWS indicated that there are no critical habitats within the proposed project area under the USFWS office's jurisdiction. See Attachment 12 for correspondence with the USFWS.

The Oklahoma State Parks Tourism and Recreation Department was contacted regarding the proposed project. A response was not received from the Tourism and Recreation Department. See Attachment 13 for the letter sent to the Tourism and Recreation Department.

The proposed project is not located in or near any public recreational areas or Public Lands or National Parks. Thus, these categories do not apply to the environmental review of the proposed project.

The aim of the Wilderness Act is to provide a legal definition of wilderness and to protect over 100 million acres of federally owned wilderness through the National Wilderness Preservation System. The proposed project is not located in federally owned wilderness. Thus, the Wilderness Area category is not applicable to the environmental review of the proposed project.

B. Important farmland

The United States Department of Agriculture (USDA) Natural Resources Conservation Service (NRCS) was contacted regarding the proposed project. A response was not received from the NRCS. See Attachment 14 for the letter sent to NRCS.

The NRCS Web Soil Survey online tool was used to characterize the soil at the proposed project site. The majority of soil in the vicinity of the project area is either fine sandy loam or silty loam. The soil report created using the tool is included as Attachment 15.

The Farmland Protection Policy Act aims to minimize the impact of programs on the unnecessary and irreversible conversion of farmland to nonagricultural uses. The proposed project is located on city-owned land and is not currently farmland but is developed as a publicly owned treatment works (POTW) owned by the City of Coweta. Thus, this Act is not applicable to the environmental review of the proposed project.

C. Floodplains

The aim of Executive Order 11988 Floodplain Management is to avoid the long- and short-term adverse impacts associated with the occupancy and modification of floodplain development wherever there is a practicable alternative. See Attachment 16 for the project location shown on a Flood Insurance Rate Map (FIRM) by FEMA. The project area is not located in the regulatory floodway or in the 100-year flood plain.

The Oklahoma Water Resources Board (OWRB) Water Management Division was contacted for comment on the proposed project. In a letter dated January 11, 2019, OWRB recommended that the local floodplain administrator be contacted for possible permit requirements for the proposed project. See Attachment 17 for correspondence with OWRB.

The Federal Emergency Management Agency (FEMA) Region 6 was contacted for comment on the proposed project. In a letter dated January 10, 2019, FEMA Mitigation Division recommended that the community floodplain administrator be contacted for the review and possible permit requirements for the proposed project. The local floodplain administrator identified in the letter is: William Cohrs, City Engineer for the City of Coweta. See Attachment 18 for correspondence with FEMA.

The Wagoner County Floodplain Administrator was contacted for comment on the proposed project. A response was not received from the County Floodplain

Administrator. See Attachment 19 for the letter sent to the County Floodplain Administrator.

The Local Community Floodplain Administrator for the City of Coweta was contacted for comment on the proposed project. In a letter dated February 27, 2019, the local floodplain administrator indicated that there appeared to be no adverse impacts to the local flood plain due to the proposed project. See Attachment 20 for correspondence with the Community Floodplain Administrator.

The United States Army Corps of Engineers (USACE) Water Management Branch was notified twice by letter and reached by phone conversation. During the phone conversation, USACE indicated that they do not comment on floodplain issues and indicated that FEMA should be contacted. See Attachment 21 for the letter sent to the USACE Water Management Branch.

The real property/ facilities requirement of the Floodplain Management Executive Order does not apply to the proposed project.

D. Wetlands

The Clean Water Act establishes the basic structure for regulating discharges of pollutants into the waters of the United States and regulating quality standards for surface waters. The USACE was contacted for comment on the proposed project relative to Section 404 of the Clean Water Act. In a letter dated January 11, 2019, the USACE Tulsa District indicated that the proposed project is not subject to regulation under Section 404 of the Clean Water Act and does not require a Department of the Army permit. See Attachment 22 for correspondence with USACE.

E. Historic properties

The aim of the National Historic Preservation Act (NHPA) is to preserve Native American cultural resources and historic properties. Historic properties are any prehistoric or historic districts, sites, buildings, structures, or objects that are eligible for or already listed in the National Register of Historic Places. Also included are any artifacts, records, and

remains (surface or subsurface) that are related to and located within historic properties and any properties of traditional religious and cultural importance to Tribes.

The Oklahoma Historical Society (OHS) (Oklahoma SHPO) was contacted for comment on the proposed project. In a letter dated January 4, 2018, the Oklahoma Historical Society indicated that there are no historic properties affected by the proposed project. See Attachment 23 for correspondence with OHS.

The Oklahoma Archeological Survey (OAS) was contacted for comment on the proposed project. In a letter dated December 13, 2018, the OAS indicated that there are no archaeological sites listed as occurring within the project area, and no archaeological materials likely to be encountered within the project area. See Attachment 24 for correspondence with OAS.

F. Native American historic consultation

The United States Department of the Interior Bureau of Indian Affairs (BIA) was contacted for comment on the proposed project. In a letter dated December 14, 2018, the BIA indicated that the office had no comments regarding the project. The letter indicated that the BIA had forwarded the proposed project to five (5) federally-recognized tribes in the project area, including: Osage Nation, Muscogee (Creek) Nation, Alabama-Quassarte Tribal Town, Kialegee Tribal Town, and Thlopthlocco Tribal Town. As of this report, no responses had been received from any of the five (5) parties. See Attachment 25 for correspondence with BIA.

Additionally, a letter was sent to the Muskogee (Creek) Nation Environmental Services. A response was not received from the Muskogee (Creek) Nation. See Attachment 26 for the letter sent to the Muskogee (Creek) Nation.

G. Biological resources

The aim of the Endangered Species Act of 1973 is to provide a means whereby threatened and endangered species and the ecosystems upon which they demand may

be conserved. The Act requires the determination of whether projects may affect threatened and endangered species and/ or designated critical habitats.

The USFWS was contacted regarding the proposed project. See Attachment 12 for correspondence with the USFWS. The ECOS-IPaC website was used to identify a list of threatened and endangered species in the proposed project area. The ECOS-IPaC letter dated January 31, 2019, indicated that there are no critical habitats under the USFWS office's jurisdiction and no refuge lands or fish hatcheries within the proposed project area. Additionally, there are no USFWS migratory birds of concern within the vicinity of the proposed project area. The letter identified seven (7) threatened, endangered, or candidate species in the project area. A discussion of each species is provided below:

Gray Bat – Endangered. No critical habitat has been designated for this species. According to the 1982 Gray Bat Recovery Plan approved by the USFWS, gray bats almost exclusively roost in cave habitats in the Southwest United States. Gray bats require forested areas between caves and feeding areas in order to increase protection from predators such as screech owls. Because of this, gray bats are not usually found along sections of river where adjacent forest has been cleared. Human disturbance is the leading cause of the decline of gray bats, from either: physically entering caves and disturbing hibernating bats; or causing deforestation near cave entrances, which decreases the canopy protection during feeding times. The Recovery Plan states that forested corridors, river edges, and reservoir shorelines should be left intact near major gray bat summer caves to prevent further population decline. The proposed project is located near the Arkansas River on land that has been previously cleared. The proposed project will not alter the river edge, any possible nearby caves, or any surrounding forested area and will thus not likely impact the gray bat.

Northern Long-Eared Bat – Threatened. No critical habitat has been designated for this species. According to the USFWS, Northern long-eared bats spend winter hibernating in caves and spend the summer roosting under the bark or in crevices of live and dead trees. The leading cause of decline of Northern long-eared bats is white-nose syndrome, a disease affecting many bat populations spreading from the Northeast United

States. Another cause is construction activities that cause the destruction or degradation of roosting and foraging habitats. According to the 2016 USFWS 4(d) Rule for the Northern Long-Eared Bat; Final Rule, the removal of trees that results in the incidental take of Northern long-eared bats is prohibited when the activity cuts or destroys known occupied maternity roost trees, or any other trees within a 150-foot radius from the maternity roost tree, during the pup season of June 1 through July 31. The proposed project area has been previously cleared. The proposed project will not remove any existing trees and will thus not likely impact the habitat of the Northern long-eared bat.

Least Tern – Endangered. No critical habitat has been designated for this species. According to the 1990 Least Tern Recovery Plan approved by the USFWS, the least tern is a migratory bird that occurs primarily on barren to sparsely vegetated riverine sandbars and lake and reservoir shorelines. The riverine nesting locations are usually at higher elevations than the river water level and can be located up to several hundred meters from the water. The least tern occurs on several tributaries of the Arkansas River in Oklahoma. The leading cause of least tern decline is the loss of riverine sandbar habitat due to river channelization, diversion and impoundment. Additionally, dam discharge is another cause due to the extreme water level fluctuations that flood existing nests and inundate potential nesting areas. Another cause is human disturbance through the recreational use of sandbars. The proposed project area is located near the Arkansas River but does not include any modifications to the river. The proposed project will not alter the river channel, nearby tributaries, or any sandbars in the river, and will thus not likely impact the habitat of the least tern. Additionally, the proposed project will not affect dam operation or flooding hazards.

Piping Plover – Threatened. There is final critical habitat for this species, but the project location is outside the critical habitat. According to the 2016 Northern Great Plains Piping Plover Recovery Plan, the piping plover is a bird that breeds and raises young on sparsely vegetated sandbars and reservoir shorelines and the shorelines of alkaline lakes. The leading cause of piping plover decline is changes in riverine habitat due to damming and water withdrawals. Other causes include human disturbance, predation, and invasive plants that affect the quality of breeding habitats. The proposed project area is located

near the Arkansas River but does not include any modifications to the river. The proposed project will not alter the river channel, nearby tributaries, or any sandbars in the river, and will thus not likely impact the habitat of the piping plover. Additionally, the proposed project will not affect dam operation or flooding hazards.

Red Knot – Threatened. No critical habitat has been designated for this species. According to the 2015 Threatened Species Status for the Rufa Red Knot; Final Rule approved by the USFWS, the red knot is a migratory shorebird that breeds in the Canadian Artic and winters in parts of the United States and South America. The red knot uses key stopover areas of the Atlantic coast or the midcontinent to rest and feed during both the northbound and southbound migrations. The leading causes of red knot decline is habitat loss from sea level rise, shoreline hardening, and development. Other causes include reduced food availability, marine diseases, parasites, invasive species, increased predators, and human disturbance. The proposed project area is located near the Arkansas River but does not include any modifications to the river or shoreline. The proposed project will not alter the river shoreline, river level, or nearby tributaries, and will thus not likely impact the habitat of the red knot.

Whooping Crane – Endangered. There is final critical habitat for this species, but the project location is outside the critical habitat. According to the 2007 Whooping Crane Recovery Plan approved by USFWS, the whooping crane is a bird species that breeds, migrates, winters, and forages in a variety of habitats, including coastal marshes and estuaries, inland marshes, lakes, ponds, wet meadows and rivers, and agricultural fields. The leading causes of whooping crane decline include habitat destruction, degradation of coastal ecosystems, and displacement by activities of man. The proposed project is located near the Arkansas River but does not include any modifications to the river. The proposed project will not alter the river or nearby tributaries, and will thus not likely impact the habitat of the whopping crane.

American Burying Beetle – Endangered. No critical habitat has been designated for this species. According to the 1991 American Burying Beetle Recovery Plan approved by USFWS, the American burying beetle is known to primarily inhabit oak-hickory forests,

grasslands, and open pastures. The American burying beetle breeds and rears its young on vertebrate carcasses. The leading causes of American burying beetle decline are not well understood, but they are thought to include DDT/ pesticide use, artificial lighting, species-specific pathogens, habitat loss and fragmentation, vertebrate competition, and the introduction of invasive species such as fire ants. The proposed project area has been previously cleared and the proposed project does not involve the removal of existing trees, and will thus not likely contribute to habitat loss of the American burying beetle.

In addition, the USFWS letter indicated that the National Wetlands Inventory resulted in two (2) areas with the following classification in the proposed project area: (1) PUBK: Palustrine System, Unconsolidated Bottom Class, Artificially Flooded Water Regime; and (2) R2UBH: Riverine System, Lower Perennial Subsystem, Unconsolidated Bottom Class, Permanently Flooded Water Regime.

H. Water quality, air quality, transportation, noise, scenic rivers, etc.

The Oklahoma Department of Environmental Quality (ODEQ) was contacted for comment on the proposed project. In a letter dated December 18, 2018, the ODEQ Office of External Affairs indicated no environmental concerns with the proposed project. However, the letter indicated that any construction activity disturbing more than one acre will require the submittal of an NOI and obtaining authorization under OKR10 construction stormwater. See Attachment 27 for correspondence with ODEQ.

The Grand River Dam Authority (GRDA) was contacted for comment on the proposed project. A response was not received from the GRDA. See Attachment 28 for the letter sent to the GRDA.

The sole source aquifer category in the FACT Environmental Effects Matrix (Attachment 7) is not applicable because the proposed project is not located in Carter, Johnston, Murray or Pontotoc Counties. Also, the petroleum on-site storage category is not applicable because petroleum is not stored on-site for the proposed project.

The Noise Control Act aims to control the major sources of noise including transportation vehicles and equipment, machinery, appliances, and other products in commerce, and

limit the impact of noise to the health and welfare of the population, particularly in urban areas. The proposed project will not significantly increase the noise emitted from the current project site. The construction activity will produce a temporary increase in the transportation of construction materials and equipment to the project area. Construction will create temporary sources of noise such as excavation activities. After construction, equipment and machinery installed on-site for the treatment of wastewater will be located in structures or enclosures and will not emit significant noise. For example, the aeration system compressors will be located inside a sound enclosure or equipped with a silencer on the exhaust muffler to attenuate sounds. Thus, the proposed project is not anticipated to increase overall noise. Additionally, the proposed project is located in an area with no surrounding habitants or development.

The aim of the Wild and Scenic Rivers Act of 1968 is to preserve certain rivers with outstanding natural, cultural, and recreational values in a free-flowing condition for the enjoyment of present and future generations. The proposed project is not located in or near any river specified by the Act. Thus, the categories under this Act do not apply to the environmental review of the proposed project.

The aim of the Coastal Zone Management Act is to provide for the management of the nation's coastal resources, including the Great Lakes, in order to preserve, protect, develop, and restore or enhance the resources of the nation's coastal zone. The proposed project is not located near any coastal zone. Thus, this Act is not applicable to the environmental review of the proposed project.

I. Socio-economic issues

The aim of the Environmental Justice Executive Order is to focus federal attention on the environmental and human health effects of federal actions on minority and low-income populations with the goal of achieved environmental protection for all communities.

The Environmental Justice online screening tool was used to evaluate the characteristics of the proposed project area. See Attachment 29 for the environmental justice maps. The screening tool shows that there are no Superfund sites or Hazardous Waste

Treatment, Storage, and Disposal Facilities (TSDF) located within a 1-mile radius of the proposed project area. The report shows that the demographic indicators in the vicinity of the proposed project area are similar to the state averages. The report shows that the environmental indicators mostly similar to the state and national averages, with a few that are higher or lower. For example, the project area values for NATA Cancer Risk and NATA Respiratory Hazard Index are slightly higher than the state and national averages. The proposed project is unlikely to affect cancer risk or respiratory hazard index. The proposed project will improve the treatment of wastewater collected city-wide and is unlikely to disproportionately affect minority or low-income populations within the project area. The proposed project will benefit the entire area served by the CPWA wastewater collection system.

J. Environmental due diligence

The aim of the Resource Conservation and Recovery Act (RCRA) is to control hazardous waste from its generation, transportation, treatment, storage, and disposal. RCRA addresses environmental problems that could result from underground storage tanks storing petroleum and other hazardous substances. The hazardous substance category is not applicable to the proposed project because there are no known hazardous substances or underground storage tanks within the proposed project area.

K. Local governmental review

The Indian Nations Council of Governments (INCOG) was contacted for comment on the proposed project. See Attachment 30 for correspondence with INCOG.

The proposed project is not located within the boundaries of any USACE lake.

L. Effects on environmental resources of the selected alternative

The selected alternative is not likely to directly affect the environmental resources evaluated in the previous sections. As shown in Attachment 7, for each environmental category, the proposed project will either not likely affect it or it does not apply. The effects on environmental resources are summarized below:

The proposed project area is near the Arkansas River but is not located in the regulatory floodway or in the 100-year flood plain. Additionally, there are seven (7) threatened or endangered species in the project area. However, the proposed project location and construction activity are not likely to impact these species because the project will not remove trees, alter the river, or significantly change the landscape from its current condition. The proposed project will temporarily increase noise during construction, but after construction is complete, the project will not significantly increase noise levels. In the environmental justice category, the proposed project will benefit the entire area served by the CPWA wastewater collection system by increasing treatment capacity and meeting growth projections.

In summary, the proposed project is not likely to affect the environmental resources discussed herein. The cumulative effects of the selected alternative will be minimal due to the nature of the improvements in that it only includes the installation of structures and piping on previously cleared land owned by the City at the current WWTP site.

VI. CORRESPONDENCE AND PUBLIC PARTICIPATION

The CPWA will hold a public hearing for the proposed project and will provide public notice 30 days prior by newspaper advertisement. This report, the Environmental Information Document (EID), will be available for review. Following the public hearing, the CWPA will conduct a public board meeting to consider a resolution to adopt the Engineering Report (ER) and EID. Next, the CWPA will submit the EID to the funding agency for review.

The CPWA will follow the public notification and public hearing guidelines as required by Appendix E of the Oklahoma Funding Agency Coordinating Team (FACT) Guidelines for Environmental Information Document/ Environmental Report for Water and Wastewater Projects published in June 2017. The requirements include submitting the ER and EID to the local DEQ office and four (4) other parties.

The CPWA will follow the resolution sample as required by Appendix F of the FACT Guidelines for Environmental Information Document/ Environmental Report for Water and Wastewater Projects.

VII. SUMMARY OF MITIGATION MEASURES

As discussed previously, there are no anticipated adverse effects of the proposed project. However, some mitigative measures will be taken in order to prevent any adverse effects. These measures include:

- A stormwater pollution prevention plan (SWPPP) will be developed and implemented as part of the proposed project. This measure will prevent the runoff of stormwater containing silt or construction materials to the surrounding land, tributaries, and Arkansas River.
- The current project does not involve the removal of trees. However, to prevent any unintentional or accidental tree removal, a note will be added to the Construction Plans stating that no trees are to be altered, destroyed, or removed during the project between the dates of June 1 and July 31 to satisfy the recovery efforts of the threatened Northern long-eared bat.
- The Arkansas River bank and tributary are not involved in the current project. However, to prevent any human disturbance during construction to these areas, a note will be added to the Construction Plans indicating that construction activity is to be limited to the specific project area and staging area(s).

Attachment 1.

City of Coweta WWTP Location Map

WDB ENGINEERING PLLC
6330 S.E. 74TH STREET
OKC, OK 73135 PH: 405-741-7090
CERTIFICATE OF AUTHORIZATION: #3987 EXP: 6-30-2019

COWETA WWTP IMPROVEMENTS

DATE: 10-16-17	APPROVED BY	DRAWN BY JAM

AERIAL LOCATION MAP

WDB ENGINEERING PLLC	ATTACHMENT 2B

G:\Projects\17-589 Coweta WWTP ER\Cad\San\17-589 AERIAL MAP.DWG

Attachment 2.

City of Coweta Population Projections

	Year	Census Population & FACT Method Projections	Average Annual Growth Rate	10 Year Growth Rate		ODOC Polynomial Trend Projection (1960-2010)	Average Annual Growth Rate		ODOC Polynomial Trend Projection (1980-2010)	Average Annual Growth Rate
Projection Formula		$Y=Y_{2010}*(1+0.037)^{(X-2010)}$				Y= 1.0580x^2 - 4,040.6361x + 3,856,833.2357			Y=3.3925x^2 - 13,369.3450x + 13,176,172.6500	
	1910	1,187			1910	1,187		1910	1,187	
	1920	1,318	1.05%	11%	1920	1,318	1.05%	1920	1,318	1.05%
	1930	1,274	-0.34%	-3%	1930	1,274	-0.34%	1930	1,274	-0.34%
	1940	1,455	1.34%	14%	1940	1,455	1.34%	1940	1,455	1.34%
	1950	1,601	0.96%	10%	1950	1,601	0.96%	1950	1,601	0.96%
	1960	1,858	1.50%	16%	1960	1,858	1.50%	1960	1,858	1.50%
	1970	2,457	2.83%	32%	1970	2,457	2.83%	1970	2,457	2.83%
	1980	4,712	6.73%	92%	1980	4,712	6.73%	1980	4,712	6.73%
	1990	6,159	2.71%	31%	1990	6,159	2.71%	1990	6,159	2.71%
	2000	7,139	1.49%	16%	2000	7,139	1.49%	2000	7,139	1.49%
	2010	9,943	3.37%	39%	2010	9,943	3.37%	2010	9,943	3.37%
	2017	12,538	3.37%		2017	11,120	1.61%	2017	11,874	2.57%
	2020	13,848	3.37%	39%	2020	11,811	2.03%	2020	12,853	2.67%
	2030	19,288	3.37%	39%	2030	14,254	1.90%	2030	16,556	2.56%
	2038	25,141	3.37%		2038	16,360	1.74%	2038	20,006	2.39%
	2040	26,863	3.37%	39%	2040	16,908	1.66%	2040	20,937	2.30%
	2048	35,016	3.37%		2048	19,184	1.59%	2048	24,930	2.21%
	2050	37,414	3.37%	39%	2050	19,774	1.53%	2050	25,997	2.12%
	2058	48,769	3.37%		2058	22,219	1.47%	2058	30,533	2.03%
	2060	52,110	3.37%	39%	2060	22,852	1.41%	2060	31,735	1.95%
	2070	72,577	3.37%	39%	2070	26,141	1.35%	2070	38,152	1.86%
	2075	85,652	3.37%	36%	2075	27,864	1.29%	2075	41,615	1.75%
	2080	101,083	3.37%	39%	2080	29,641	1.26%	2080	45,247	1.72%
	2010-2075 growth		917%		2010-2075 growth		198%	2010-2075 growth		355%
	linear avg. annual over 65 years		14.10%		linear avg. annual over 65 years		3.05%	linear avg. annual over 65 years		5.46%
	exp. avg annual calc		3.37%		exp. avg annual calc		1.60%	exp. avg annual calc		2.23%

Coweta Population Projection

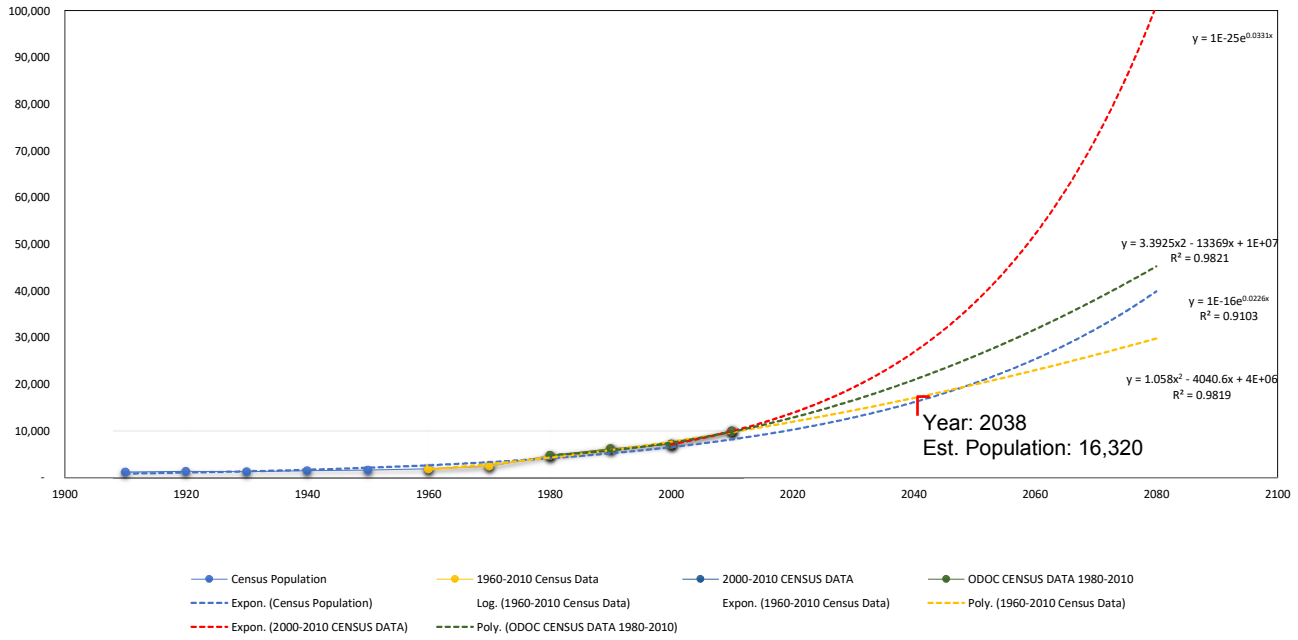

Attachment 3.

Summary of Discharge Flow Monitoring, Jan. 2017 – Sept. 2017

WWTP DATA

Date	Influent	Effluent	Monthly Influent Average	Monthly Effluent Average
1/1/2017	0.507	0.562		
1/2/2017	0.673	0.564		
1/3/2017	0.392	0.544		
1/4/2017	0.513	0.491		
1/5/2017	0.507	0.591		
1/6/2017	0.565	0.583		
1/7/2017	0.531	0.473		
1/8/2017	0.497	0.521		
1/9/2017	0.569	0.638		
1/10/2017	0.486	0.629		
1/11/2017	0.487	0.501		
1/12/2017	0.496	0.619		
1/13/2017	0.615	0.526		
1/14/2017	0.783	0.744		
1/15/2017	0.799	0.842		
1/16/2017	0.740	0.922		
1/17/2017	0.604	0.879		
1/18/2017	0.532	0.733		
1/19/2017	0.563	0.668		
1/20/2017	0.619	0.595		
1/21/2017	0.618	0.664		
1/22/2017	0.601	0.618		
1/23/2017	0.625	0.725		
1/24/2017	0.530	0.569	0.570	0.629
1/25/2017	0.545	0.530	0.546	0.606
1/26/2017	0.546	0.612	0.392	0.473
1/27/2017	0.535	0.704	0.799	0.922
1/28/2017	0.560	0.572		
1/29/2017	0.614	0.606		
1/30/2017	0.511	0.576		
1/31/2017	0.501	0.700	0.570	0.629
2/1/2017	0.524	0.581		
2/2/2017	0.564	0.611		
2/3/2017	0.576	0.492		
2/4/2017	0.884	0.556		
2/5/2017	0.641	0.533		
2/6/2017	0.536	0.622		
2/7/2017	0.507	0.627		
2/8/2017	0.527	0.589		
2/9/2017	0.514	0.624		
2/10/2017	0.559	0.504		
2/11/2017	0.572	0.574		
2/12/2017	0.459	0.592		
2/13/2017	0.616	0.536		
2/14/2017	0.953	0.730		
2/15/2017	0.694	1.044		
2/16/2017	0.599	0.821		
2/17/2017	0.611	0.694		
2/18/2017	1.091	0.590		
2/19/2017	0.637	0.561		
2/20/2017	0.685	0.867		
2/21/2017	0.158	0.764		
2/22/2017	0.573	0.673		
2/23/2017	0.567	0.678		
2/24/2017	0.510	0.676		
2/25/2017	0.667	0.633		
2/26/2017	0.535	0.573		
2/27/2017	0.560	0.605		
2/28/2017	0.550	0.640	0.608	0.645

WWTP DATA

Date	Influent	Effluent	Monthly Influent Average	Monthly Effluent Average
3/1/2017	0.538	0.584		
3/2/2017	0.544	0.688		
3/3/2017	0.578	0.557		
3/4/2017	0.520	0.494		
3/5/2017	0.551	0.512		
3/6/2017	0.610	0.588		
3/7/2017	0.597	0.817		
3/8/2017	0.559	0.545		
3/9/2017	0.549	0.648		
3/10/2017	0.569	0.400		
3/11/2017	0.661	0.466		
3/12/2017	0.593	0.619		
3/13/2017	0.578	0.605		
3/14/2017	0.558	0.654		
3/15/2017	0.577	0.643		
3/16/2017	0.577	0.533		
3/17/2017	0.431	0.595		
3/18/2017	0.520	0.533		
3/19/2017	0.567	0.557		
3/20/2017	0.562	0.639		
3/21/2017	0.557	0.609		
3/22/2017	0.539	0.442		
3/23/2017	0.544	0.496		
3/24/2017	0.613	0.643		
3/25/2017	0.610	0.611		
3/26/2017	0.623	0.571		
3/27/2017	0.649	0.738		
3/28/2017	0.582	0.686		
3/29/2017	0.672	0.643		
3/30/2017	0.618	0.638		
3/31/2017	0.636	0.619	0.577	0.593
4/1/2017	0.541	0.644		
4/2/2017	0.670	0.591		
4/3/2017	0.697	0.729		
4/4/2017	0.623	0.776		
4/5/2017	0.605	0.567		
4/6/2017	0.600	0.627		
4/7/2017	0.657	0.658		
4/8/2017	0.518	0.609		
4/9/2017	0.589	0.565		
4/10/2017	0.558	0.640		
4/11/2017	0.572	0.631		
4/12/2017	0.535	0.604		
4/13/2017	0.566	0.611		
4/14/2017	0.522	0.573		
4/15/2017	0.649	0.565		
4/16/2017	0.850	0.697		
4/17/2017	0.865	0.990		
4/18/2017	0.675	0.964		
4/19/2017	0.639	0.854		
4/20/2017	0.739	0.754		
4/21/2017	1.798	0.594		
4/22/2017	1.803	1.784		
4/23/2017	0.699	1.603		
4/24/2017	0.904	1.360		
4/25/2017	1.081	1.155		
4/26/2017	0.961	1.024		
4/27/2017	0.879	0.993		
4/28/2017	0.905	0.928		
4/29/2017	2.857	1.016		
4/30/2017	1.747	1.957	0.847	0.831

WWTP DATA

Date	Influent	Effluent	Monthly Influent Average	Monthly Effluent Average
5/1/2017	1.053	1.822		
5/2/2017	1.120	1.657		
5/3/2017	0.825	1.417		
5/4/2017	0.951	1.209		
5/5/2017	0.895	0.934		
5/6/2017	0.772	0.895		
5/7/2017	0.770	0.847		
5/8/2017	0.698	0.859		
5/9/2017	0.694	0.857		
5/10/2017	0.957	0.815		
5/11/2017	1.684	1.067		
5/12/2017	1.631	1.481		
5/13/2017	1.052	1.465		
5/14/2017	1.867	1.523		
5/15/2017	0.944	1.301		
5/16/2017	0.891	1.123		
5/17/2017	0.901	1.117		
5/18/2017	1.307	1.009		
5/19/2017	2.847	1.035		
5/20/2017	2.952	2.153		
5/21/2017	1.703	2.397		
5/22/2017	1.390	2.274		
5/23/2017	1.256	2.416		
5/24/2017	1.006	2.044		
5/25/2017	0.981	1.400		
5/26/2017	0.951	1.375		
5/27/2017	0.790	1.051		
5/28/2017	0.847	0.996		
5/29/2017	0.778	0.898		
5/30/2017	0.708	0.930		
5/31/2017	0.733	0.835	1.160	1.329
6/1/2017	0.710	0.835		
6/2/2017	0.702	0.792		
6/3/2017	0.715	0.760		
6/4/2017	0.691	0.778		
6/5/2017	0.667	1.040		
6/6/2017	0.649	0.689		
6/7/2017	0.614	0.759		
6/8/2017	0.634	0.713		
6/9/2017	0.691	0.632		
6/10/2017	0.563	0.557		
6/11/2017	0.568	0.667		
6/12/2017	0.611	0.657		
6/13/2017	0.609	0.607		
6/14/2017	0.625	0.574		
6/15/2017	0.625	0.607		
6/16/2017	0.692	0.799		
6/17/2017	0.681	0.615		
6/18/2017	0.612	0.671		
6/19/2017	0.638	0.726		
6/20/2017	0.570	0.944		
6/21/2017	0.570	0.678		
6/22/2017	0.639	0.585		
6/23/2017	0.522	0.664		
6/24/2017	0.564	0.725		
6/25/2017	0.558	0.631		
6/26/2017	0.606	0.652		
6/27/2017	0.523	0.608		
6/28/2017	0.556	0.644		
6/29/2017	0.545	0.648		
6/30/2017	0.218	0.616	0.606	0.696

WWTP DATA

Date	Influent	Effluent	Monthly Influent Average	Monthly Effluent Average
7/1/2017	0.746	0.628		
7/2/2017	0.943	0.655		
7/3/2017	0.691	0.896		
7/4/2017	0.353	0.883		
7/5/2017	1.142	0.854		
7/6/2017	0.630	0.807		
7/7/2017	0.782	0.802		
7/8/2017	0.559	0.713		
7/9/2017	0.676	0.750		
7/10/2017	0.658	0.682		
7/11/2017	0.573	0.719		
7/12/2017	0.592	0.646		
7/13/2017	0.555	0.648		
7/14/2017	0.652	0.654		
7/15/2017	0.443	0.581		
7/16/2017	0.564	0.573		
7/17/2017	0.608	0.680		
7/18/2017	0.661	0.642		
7/19/2017	0.432	0.570		
7/20/2017	0.535	0.556		
7/21/2017	0.562	0.534		
7/22/2017	0.590	0.581		
7/23/2017	0.452	0.592		
7/24/2017	0.473	0.566		
7/25/2017	0.510	0.600		
7/26/2017	0.513	0.556		
7/27/2017	0.628	0.625		
7/28/2017	0.537	0.673		
7/29/2017	0.725	0.657		
7/30/2017	0.431	0.584		
7/31/2017	0.489	0.603	0.603	0.662

WWTP DATA

Date	Influent	Effluent	Monthly Influent Average	Monthly Effluent Average
8/1/2017	0.581	0.613		
8/2/2017	0.565	0.651		
8/3/2017	0.578	0.673		
8/4/2017	0.623	0.689		
8/5/2017	1.029	0.685		
8/6/2017	1.019	1.281		
8/7/2017	0.798	1.467		
8/8/2017	0.634	1.263		
8/9/2017	0.657	0.831		
8/10/2017	0.908	0.744		
8/11/2017	0.851	0.900		
8/12/2017	0.855	0.966		
8/13/2017	0.828	0.908		
8/14/2017	1.316	1.029		
8/15/2017	1.191	1.190		
8/16/2017	1.469	1.395		
8/17/2017	1.329	1.470		
8/18/2017	0.353	1.360		
8/19/2017	0.903	1.086		
8/20/2017	0.904	1.043		
8/21/2017	0.333	0.943		
8/22/2017	0.685	0.665		
8/23/2017	0.771	0.759		
8/24/2017	0.717	0.764		
8/25/2017	0.575	0.671		
8/26/2017	0.725	0.635		
8/27/2017	0.639	0.660		
8/28/2017	0.648	1.084		
8/29/2017	0.625	0.740		
8/30/2017	0.696	0.654		
8/31/2017	no value	0.594	0.794	0.917
	Daily Influent	Daily Effluent	Monthly Influent	Monthly Effluent
Max	2.952	2.416	1.160	1.329
Min	0.158	0.400	0.392	0.473
Average	0.725	0.794	0.673	0.744
Median	0.618	0.664	0.604	0.653
Std. Deviation S	0.358	0.342	0.199	0.228
Std. Deviation P	0.357	0.341	0.191	0.218
Peaking Factor	4.074	3.043	1.725	1.786

Attachment 4.

Existing WWTP Layout

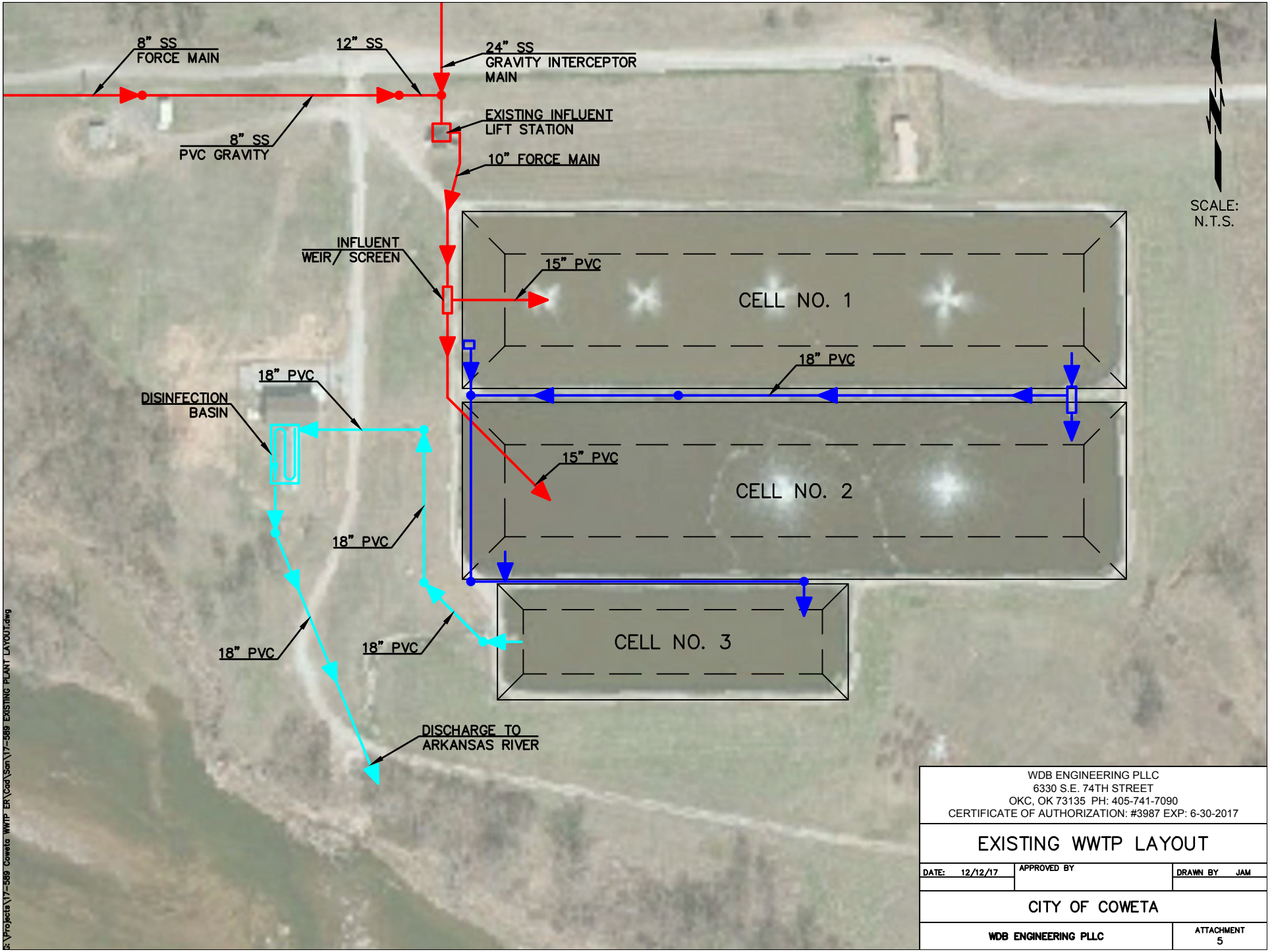

WDB ENGINEERING PLLC
6330 S.E. 74TH STREET
OKC, OK 73135 PH: 405-741-7090
CERTIFICATE OF AUTHORIZATION: #3987 EXP: 6-30-2017

EXISTING WWTP LAYOUT

DATE: 12/12/17	APPROVED BY	DRAWN BY JAM

CITY OF COWETA

WDB ENGINEERING PLLC	ATTACHMENT 5

S:\Projects\17-589 Coweta WWTP ER\Cad\Scn\17-589 EXISTING PLANT LAYOUT.dwg

Attachment 5.

Existing WWTP Process Flow Schematic

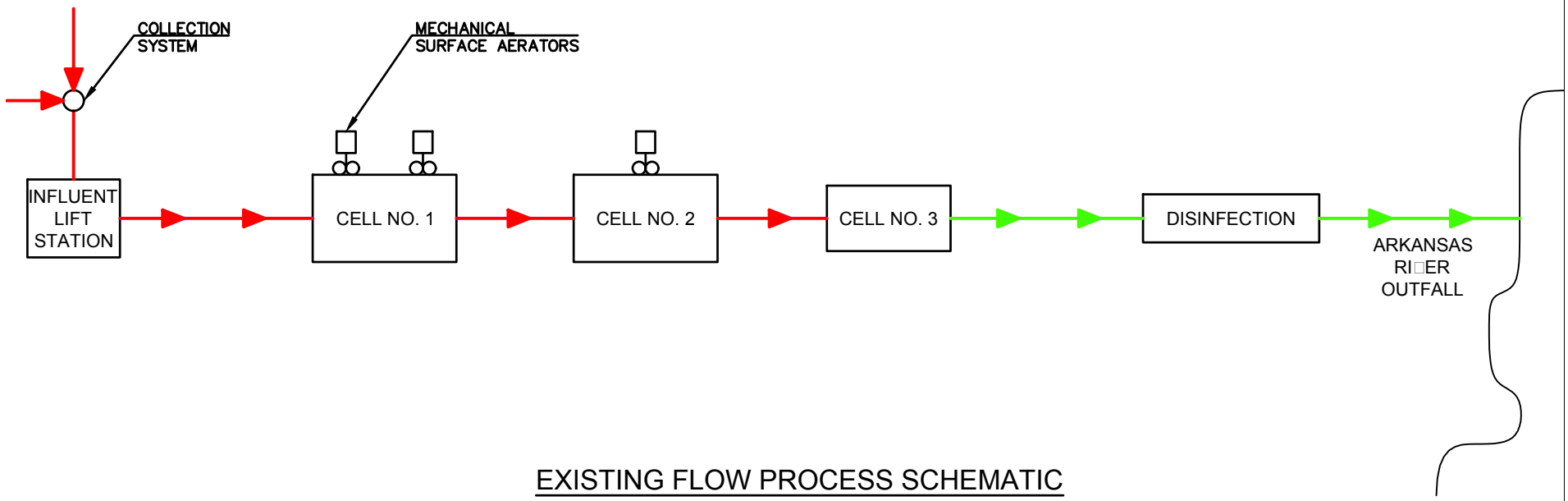

EXISTING FLOW PROCESS SCHEMATIC

RAW INFLUENT □MIXED LI□UOR

SUPERNATANT

WDB ENGINEERING PLLC
6330 S.E. 74TH STREET
OKC, OK 73135 PH: 405-741-7090
CERTIFICATE OF AUTHORIZATION: #3987 EXP: 6-30-2017

COWETA WWTP IMPROVEMENTS

DATE: 12/12/17	APPROVED BY	DRAWN BY JAM

EXISTING FLOW PROCESS SCHEMATIC

WDB ENGINEERING PLLC	ATTACHMENT 6

S:\Projects\17-589 Coweta WWTP ER\Cad\San\17-589 PLANT SCHEMATIC.dwg

Attachment 6.

OPDES Permit No. OK0020281

SCOTT A. THOMPSON
Executive Director

OKLAHOMA DEPARTMENT OF ENVIRONMENTAL QUALITY

MARY FALLIN
Governor

May 9, 2016

CERTIFIED MAIL – RETURN RECEIPT REQUESTED

Steven C. Whitlock, City Manager
Coweta Public Works Authority
P.O. Box 850
Coweta, OK 74429

RE: DEQ Application for Renewal, Permit to Discharge Application No. OK0020281
Coweta PWA – Wastewater Treatment Plant
Facility ID No. S20410

Dear Mr. Whitlock:

Your new OPDES permit is enclosed. All public notice requirements have been met and public comment periods have expired. The draft permit received no comments; therefore, the final permit has not been changed. The effective and expiration dates of this final permit appear on the cover page.

Previous pre-printed Discharge Monitoring Report (DMR) forms may not be consistent with the new permit requirements and there may be delays in receiving updated DMR forms. We are enclosing a blank DMR form (with instructions), which may be copied and used for reporting if necessary prior to receiving updated DMR forms.

Should you have any questions regarding the final permit, please contact the Municipal Permits Section at the letterhead address or telephone (405) 702-8100. Should you have any questions regarding compliance with the conditions of this permit, please contact the Municipal Wastewater Enforcement Section at the same address and phone number.

Sincerely,

Micheal Jordan, P.E., Manager
Municipal Discharge and Stormwater Permit Section
Water Quality Division

TK/tj CG/ST/MM

Enclosures

c: Robert Werley, Director of Public Works, Coweta PWA

AUTHORIZATION TO DISCHARGE UNDER THE OKLAHOMA POLLUTANT DISCHARGE ELIMINATION SYSTEM

PERMIT NUMBER: OK0020281
ID NUMBER: S20410

PART I

In compliance with the Oklahoma Pollutant Discharge Elimination System Act (OPDES Act), Title 27A O.S. § 2-6-201 *et seq.* as amended, and the rules of the State of Oklahoma Department of Environmental Quality (DEQ) adopted thereunder {See OAC 252:606}; the Federal Clean Water Act, Public Law 95-217 (33 U.S.C. 1251 *et seq.*), Section 402; and NPDES Regulations (40 CFR Parts 122, 124, and 403),

Coweta Public Works Authority
P.O. Box 850
Coweta, OK 74429

is hereby authorized to discharge treated wastewater from a facility located at approximately

NW¼, SW¼, Section 30, Township 17 North,
Range 16 East, Indian Meridian,
Wagoner County, Oklahoma

to receiving waters: Arkansas River at the point located at approximately

Latitude:	35° 55' 14.689" N	[GPS: NAD 1983 CONUS]
Longitude:	95° 39' 08.170" W	[GPS: NAD 1983 CONUS]

Water Body I.D. No. 120410010080_00

in accordance with effluent limitations, monitoring requirements and other conditions set forth in Parts I, II, III, and IV hereof.

This permit replaces and supersedes the previous permit issued on July 14, 2011.

The issuance date of this permit is May 9, 2016.

This permit shall become effective June 1, 2016.

This permit and authorization to discharge shall expire at midnight May 31, 2021.

For the Oklahoma Department of Environmental Quality:

Micheal Jordan, P.E., Manager
Municipal Discharge and Stormwater Permit Section
Water Quality Division

Shellie Chard-McClary, Director
Water Quality Division

A. Final Effluent Limitations and Monitoring Requirements (Outfall 001)

Beginning the effective date of the permit through the expiration date of the permit, the permittee is authorized to discharge treated wastewater in accordance with the following limitations:

Effluent Characteristic		Discharge Limitations				Monitoring Requirements	
		Mass Loading (lb/day)	Concentrations (mg/l unless otherwise specified)			Frequency	Sample Type
		Monthly Avg.	Monthly Avg.	Weekly Avg.	Daily Max.		
Flow (mgd) [50050]	Year round	---	Report	---	Report	7 per week	Totalized
Biochemical Oxygen Demand -5 Day (BOD_5) [00310]	Year round	190.2	30	45	---	3/Month	3-hour composite
Total Suspended Solids [00530]	Year round	570.5	90	135	---		
pH (standard unit) [00400]	Year round	---	6.5 – 9.0			2 per week	Grab
E. coli [a] [51040]	May – Sept	---	126 [b]	--	406	2 per week	
	Oct – Apr	---	630 [b]	---	2,030	1 per week	
Total Residual Chlorine (TRC) [STORET: 50060]	Year round	---	Instantaneous Maximum: No Measurable [c]			Daily	

[a] E. coli shall be reported in MPN/100 ml.
[b] Monthly data for E. coli is reported as geometric mean of all samples in that month.
[c] No measurable is defined as less than 0.1 mg/l.

Sampling Point

Samples taken for compliance with the monitoring requirements specified above shall be taken at the discharge from the final treatment unit.

Year-round Requirements

- There shall be no discharge of floating solids or visible foam in other than trace amounts.
- There shall be no discharge of a visible sheen of oil or globules of oil or grease on or in the water. Oil and grease shall not be present in quantities that adhere to stream banks and coat bottoms of water courses or which cause deleterious effects to the biota.
- All monitoring and reporting requirements shall also be in compliance with Part III of this permit.

B. Sanitary Sewer Overflows

Any bypass in the collection system [sanitary sewer overflow (SSO)] shall be reported in accordance with Part III.B.6 of this permit.

PART II. OTHER PERMIT REQUIREMENTS

A. CONTRIBUTING INDUSTRIES AND PRETREATMENT REQUIREMENTS

1. The following pollutants shall not be introduced into a Publicly Owned Treatment Works (POTW) facility, defined in 40 CFR 403.3(o) "as any devices and systems used in storage, treatment, recycling, and reclamation of municipal sewage and industrial wastes of a liquid nature. It also includes sewers, pipes, and other conveyances only if they convey wastewater to a POTW Treatment Plant. The term also means the municipality as defined in Section 502(4) of the Act, which has jurisdiction over the Indirect Discharges to and from such treatment works."

    a. Pollutants which create a fire or explosion hazard in the POTW facility, including, but not limited to, wastestreams with a closed cup flashpoint of less than 60°C (140°F) using the test methods specified in 40 CFR 261.21;

    b. Pollutants which will cause corrosive structural damage to the POTW, but in no case discharges with pH lower than 5.0, unless the works are specifically designed to accommodate such discharges;

    c. Solid or viscous pollutants in amounts which will cause obstruction to the flow in the POTW, resulting in interference;

    d. Any pollutant, including oxygen demanding pollutants (e.g., BOD), released in a discharge at a flow rate and/or pollutant concentration which will cause interference with the POTW;

    e. Heat in amounts which will inhibit biological activity in the POTW resulting in interference but in no case heat in such quantities that the temperature at the POTW treatment plant exceeds 40°C (104°F) unless the Approval Authority, upon request of the POTW, approves alternate temperature limits;

    f. Petroleum oil, non-biodegradable cutting oil, or products of mineral oil origin in amounts that will cause interference or pass through;

    g. Pollutants which result in the presence of toxic gases, vapors, or fumes within the POTW in a quantity that may cause acute worker health and safety problems; and

    h. Any trucked or hauled pollutants, except at discharge points designated by the POTW.

2. The permittee shall require any indirect discharger to the treatment works to comply with the reporting requirements of Sections 204(b), 307, and 308 of the Act, including any requirements established under 40 CFR Part 403.

3. The permittee shall provide adequate notice of the following:

    a. Any new introduction of pollutants into the treatment works from an indirect discharger which would be subject to Sections 301 and 306 of the Act and/or Sections 40 CFR 405-499 if it were directly discharging those pollutants;

b. Any substantial change in the volume or character of pollutants being introduced into the treatment works by a source introducing pollutants into the treatment works at the time of issuance of the permit; and

c. Any notice shall include information on (i) the quality and quantity of effluent to be introduced into the treatment works and (ii) any anticipated impact of the change on the quality or quantity of effluent to be discharged from the POTW.

B. RE-OPENER CLAUSE

This permit may be re-opened for modification or revocation and reissuance to require additional monitoring and/or effluent limitations where actual or potential exceedances of State water quality criteria are determined to be the result of the permittee's discharge to the receiving water(s), or a revised Total Maximum Daily Load (TMDL) is established for the receiving water(s), or when required as technology. Modification or revocation and reissuance of the permit shall follow regulations listed at 40 CFR 124.5.

C. BIOSOLIDS/SEWAGE SLUDGE REQUIREMENTS

1. The biosolids/sewage sludge from this facility is self-contained within the lagoon treatment system.

2. The permittee will be required to prepare and obtain approval of a biosolids/sewage sludge management plan prior to removing biosolids/sewage sludge from the facility. Biosolids/sewage sludge disposal practices shall comply with the Federal regulations for landfills, biosolids/sewage sludge, and solid waste disposal established at 40 CFR Part 257, 503, and the DEQ rules governing Sludge Management (OAC 252:515 and OAC 252:606) as applicable.

3. The permittee is required to maintain all records relevant to biosolids/sewage sludge disposal for the life of the permit. These records shall be made available to the ODEQ upon request.

4. The permittee shall give 120 days prior notice to DEQ of any change planned in the biosolids/sewage sludge disposal practice.

5. The permittee shall also comply with all applicable biosolids/sewage sludge requirements in Part IV of this permit.

D. POLLUTION PREVENTION REQUIREMENTS

1. The permittee shall institute a program within 12 months of the effective date of the permit (or continue an existing program) directed towards optimizing the efficiency and extending the useful life of the facility. The permittee shall consider the following items in the program:

   a. The influent loadings, flow and design capacity;
   b. The effluent quality and plant performance;
   c. The age and expected life of the wastewater treatment facility's equipment;
   d. Bypasses and overflows of the tributary sewerage system and treatment works;
   e. New developments at the facility;
   f. Operator certification and training plans and status;
   g. The financial status of the facility;
   h. Preventative maintenance programs and equipment conditions; and
   i. An overall evaluation of conditions at the facility.

2. The permittee shall prepare the following information on the biosolids/sewage sludge generated by the facility:

   a. An annual quantitative tabulation of the ultimate disposition of all biosolids/sewage sludge (including, but not limited to, the amount beneficially reused, landfilled, and incinerated).

   b. An assessment of technological processes and an economic analysis evaluating the potential for beneficial reuse of all biosolids/sewage sludge not currently beneficially reused including a listing of any steps which would be required to achieve the biosolids/sewage sludge quality necessary to beneficially reuse the biosolids/sewage sludge.

   c. A description of, including the expected results and the anticipated timing for, all projects in process, in planning and/or being considered which are directed towards additional beneficial reuse of biosolids/sewage sludge.

   d. An analysis of one composite sample of the biosolids/sewage sludge collected prior to ultimate re-use or disposal shall be performed for the pollutants listed in Part IV, Element 1, Section III, Table 3 of the permit.

   e. A listing of the specific steps (controls/changes) which would be necessary to achieve and sustain the quality of the biosolids/sewage sludge so that the pollutant concentrations in the biosolids/sewage sludge fall below the pollutant concentration criteria listed in Part IV, Element 1, Section III, Table 3 of the permit.

   f. A listing of, and the anticipated timing for, all projects in process, in planning, and/or being considered which are directed towards meeting the biosolids/sewage sludge quality referenced in (e) above.

The permittee shall certify in writing, within three years of the effective date of the permit, that all pertinent information is available. This certification shall be submitted to:

Oklahoma Department of Environmental Quality
Water Quality Division
Municipal Permits Section
P. O. Box 1677
707 North Robinson Street
Oklahoma City, Oklahoma 73101-1677

FACT SHEET

FOR THE DRAFT AUTHORIZATION TO DISCHARGE TO WATERS OF THE UNITED STATES UNDER THE OKLAHOMA POLLUTANT DISCHARGE ELIMINATION SYSTEM (OPDES).

DEQ Permit Number:	OK0020281
State ID Number:	S20410
Applicant:	Coweta Public Works Authority P.O. Box 850 Coweta, OK 74429
Issuing Office:	Oklahoma Department of Environmental Quality (DEQ) Water Quality Division 707 North Robinson P.O. Box 1677 Oklahoma City, Oklahoma 73101-1677
Prepared By:	Tony Kakani, P.E. Municipal Permits Section Water Quality Division
Date Prepared:	April 28, 2016
Reviewed By:	Micheal Jordan, P.E., Manager Municipal Discharge and Stormwater Permit Section Water Quality Division Michael B. Moe, P.E. Engineering Manager Wastewater Group Water Quality Division

The State of Oklahoma Department of Environmental Quality (DEQ) has made a tentative determination to issue a permit for the discharge described in the application. The DEQ is the permitting authority and this permit will be enforceable under both Federal and State laws, rules and regulations. Permit requirements are based on NPDES regulations (40 CFR Parts 122, 124, and 403) and the Oklahoma Pollutant Discharge Elimination System Act (OPDES Act), Title 27A O.S., § 2-6-201 *et seq.* and the rules of the DEQ adopted thereunder {See OAC 252:606}.

I. PERMITTING BACKGROUND

A. CHRONOLOGY OF PERMITTING ACTIVITIES

The following is a chronology of permitting activities since issuance of the previous OPDES permit:

March 23, 2016:	Newspaper publication of public notice of draft permit.
March 3, 2016:	Draft permit package sent to applicant for courtesy review and for public notice.
February 11, 2016:	Response to option letter for bacteria received from applicant.
February 4, 2016:	Option letter for bacteria and reporting units sent to applicant.
February 3, 2016:	Administrative review of permit application completed.
February 1, 2016:	Certification of public notice of filing of application received.
January 21, 2016:	Notice of incomplete application sent to applicant.
January 19, 2016:	OPDES permit application (Form 2M2) received.
July 14, 2011:	Previous OPDES permit issued.

B. PROPOSED PERMITTING ACTION

It is proposed that Permit No. OK0020281, which was effective August 1, 2011, and expires July 31, 2016, and for which application for renewal was timely submitted prior to permit expiration, be reissued for a five year term in accordance with regulations promulgated at 40 CFR 122.46(a) and OAC 252:606-1-3(b).

II. APPLICANT ACTIVITY

A. DESCRIPTION AND LOCATION OF FACILITY

The facility is located at 29031 E. 164th Street South, Coweta, in the NW ¼, SW ¼, Section 30, Township 17 North, Range 16 East, Indian Meridian, Wagoner County, Oklahoma. Under SIC code 4952, the facility provides biological treatment of domestic sewage.

B. WASTEWATER GENERATION AND TREATMENT

1. Treatment Plant

The facility's design average daily flow is 0.76 million gallons per day (mgd), which is less than the design average daily flow of 3.0 mgd specified in the State of Oklahoma Water Quality Management Plan (WQMP). The wastewater received at this Publicly Owned Treatment Works (POTW) consists of domestic sewage. Biological treatment of the wastestream takes place in a three cell aerated lagoon system and a chlorine contact basin prior to discharge. Liquid chlorine is used for disinfecion and sodium bisulfate is used for dechlorination.

2. Industrial Contributions

According to the information provided in the application, the facility does not receive industrial wastewaters.

III. DISCHARGE LOCATION

Sampling Point and Outfall 001

	Location			Receiving Stream
	Legal Description	Latitude	Longitude	
Outfall 001 physical location and sampling point	SW ¼, NW ¼, SW ¼, Section 30, Township 17 North, Range 16 East, Indian Meridian, Wagoner County, Oklahoma	35° 55' 14.689" N (GPS: 1983 NAD)	95° 39' 08.170" W (GPS: 1983 NAD)	Arkansas River

IV. TECHNOLOGY-BASED EFFLUENT LIMITATIONS AND CONDITIONS

POTWs treating domestic sewage are required by 40 CFR 133 to provide secondary or secondary-equivalent treatment. The Oklahoma definition of secondary treatment, which sets minimum requirements for developing wasteload allocations for municipalities in the State's Water Quality Management Plan (WQMP), is defined at OAC 252:606-5-2(2). The definitions are dependent on the type of treatment system and whether the receiving stream flow is perennial or intermittent. Since the facility is a lagoon system discharging to a perennial stream, secondary treatment is defined according to OAC 252:606-5-2(2)(D) as indicated below:

Lagoon System

- 5-day Biochemical Oxygen Demand (BOD_5)
  - A monthly average effluent concentration of 30 mg/l BOD_5
  - A weekly average effluent concentration of 45 mg/l BOD_5

- Total Suspended Solids (TSS)
  - A monthly average effluent concentration of 90 mg/l TSS
  - A weekly average effluent concentration of 135 mg/l TSS

- pH
  - A pH range between 6.5 and 9.0 standard units, inclusive.

V. EFFLUENT LIMITATIONS AND CONDITIONS

A. RECEIVING STREAM DESIGNATED USES AND ANTIDEGRADATION PROVISIONS

Outfall 001 discharges to the Arkansas River (WBID 120410010080_00) in Segment 120410 of the Arkansas River Basin. As designated in Appendix A of the Oklahoma Water Quality Standards (OWQS), the designated beneficial uses in this segment are:

- Emergency Public and Private Water Supplies (OAC 785:45-5-11)
- Fish and Wildlife Propagation (OAC 785:45-5-12)/ Warm Water Aquatic Community
- Agriculture (OAC 785:45-5-13)
- Secondary Body Contact Recreation (OAC 785:45-5-17)
- Navigation (OAC 785:45-5-18)
- Aesthetics (OAC 785:45-5-19)
- Fish Consumption (OAC 785:45-5-20)

While Secondary Body Contact Recreation is the stated designated beneficial use for this segment of Arkansas River, footnote (2) in Appendix A of OAC 785:45 states that the criteria for the beneficial use of Primary Body Contact Recreation (PBCR) apply regardless of the recreation use designated. Therefore, the criteria for the protection of PBCR are applied to the Arkansas River in the draft pemit.

The Arkansas River is not designated as an Outstanding Resource Water (ORW), High Quality Water (HQW), or Sensitive Water Supply (SWS) in Appendix A of the OWQS. Neither is it designated in Table 1 of Appendix B of the OWQS as an area of ecological and/or recreational significance or in Table 2 of Appendix B as an area containing federally-listed endangered species.

B. WATER QUALITY STANDARDS IMPLEMENTATION

1. DO and DO-Demanding Substances – Fish and Wildlife Propagation Use (Outfall 001)

OAC 785:45-5-12(f)(1) requires that where DO-demanding substances are present in an effluent at significant levels, a WLA must be established according to certain seasonal criteria dependent on the receiving water's aquatic community subcategory. A model was run which indicated that secondary treatment standards are sufficient to maintain water quality standards.

For purposes of establishing permit limitations for DO-demanding substances, the seasonal monthly average limit (MAL) in the draft permit for each effluent characteristic is set equal to the corresponding WLA concentration. The corresponding weekly average limit (WAL) is set equal to 1.5 times the seasonal WLA concentration in accordance with 40 CFR 122.45(d)(2).

2. pH – Fish and Wildlife Propagation Use (Outfall 001)

OAC 785:45-5-12(f)(3) states, "pH values shall be between 6.5 and 9.0 in waters designated for fish and wildlife propagation; unless pH values outside that range are due to natural conditions." This pH range is established in the draft permit.

3. Oil and Grease – Fish and Wildlife Propagation Use (Outfall 001)

In accordance with OAC 758:45-5-12(f)(4), a narrative condition prohibiting the discharge of any visible sheen or globules of oil or grease or in quantities that adhere to stream banks and coat bottoms of water courses or which cause deleterious effects to the biota will be included in the draft permit.

4. Bacterial Criteria

The previous permit issued in 2011 incorporated effluent limitations for fecal coliform for the primary body contact recreation months of May through September. However, fecal coliform has been discontinued from the Water Quality Standards and in accordance with OAC 785:45-5-13 (c), the discharge permit shall contain limitations of either E. coli or Enterococcus. On February 4, 2016, the facility was asked to choose the bacteria species and the reporting units. The facility informed the DEQ on February 11, 2016 to issue the permit with E. coli in MPN/100 ml.

a. Bacteria Limitation – Primary Body Contact Recreation Use (Outfall 001)

- In accordance with OAC 252:690-3-86(a)(2), the draft permit will have a *E. coli* monthly average limit (MAL) of 126 MPN/100ml, expressed as a geometric mean, and a daily maximum limit (DML) of 406 MPN/100ml in effect for the "recreational period" of May 1 through September 30.

- Segment 120410 of the Arkansas River is impaired for bacteria. Therefore, in accordance with OAC 252:690-3-86(b), from October 1 through April 30; E. Coli monthly average limit of 630 MPN/100ml, expressed as a geometric mean, and the daily maximum limit of 2030 MPN/100ml stated in OAC 252:690-3-86(c)(2) apply to permittees that discharge to streams impaired for bacteria.

- In accordance with OAC 252:690-3-89(a)(3), the draft permit will have a bacteria monitoring frequency of two per week during the months of May through September to protect the PBCR beneficial use and once a week for the months of October through April to protect the SBCR beneficial use since the receiving stream is impaired for bacteria.

b. Total Coliform – Public and Private Water Supply Use (Outfall 001)

Since this receiving stream is not listed as a Public and Private Water Supply no permitting action is necessary to protect this use.

5. Toxicity from Halogenated Oxidants – Fish and Wildlife Propagation Use (Outfall 001)

OAC 785:46-3-1(c) states "Toxicity from halogens (e.g., chlorine, bromine, and bromochloro compounds) will be controlled by dehalogenation." Chapter 2, Part III of the CPP implements this narrative criterion as follows: The requirement of OAC 785:46-3-1(c) for dehalogenation is typically implemented as "no measureable amount" in the effluent. "No measurable amount" is defined by the DEQ to be < 0.1 mg/l.

6. Floatable Solids and Foam – Aesthetics Use (Outfall 001)

In accordance with OAC 785:45-5-9(b), a narrative condition prohibiting the discharge of floating solids or visible foam in other than trace amounts will be included in the draft permit.

7. Pretreatment Program

The DEQ has tentatively determined that the permittee is not required to develop a full pretreatment program.

8. Biosolids/Sewage Sludge Requirements

The biosolids/sewage sludge from this facility is self-contained within the lagoon treatment system.

The permittee will be required to prepare and obtain approval of a biosolids/sewage sludge management plan prior to removing biosolids/sewage sludge from the facility. The plan shall comply with the Federal regulations for landfills, biosolids/sewage sludge, and solid waste disposal established at 40 CFR Part 257, 503, and the DEQ rules governing Sludge Management (OAC 252:515 and OAC 252:606) as applicable.

The permittee is required to maintain all records relevant to biosolids/sewage sludge disposal for the life of the permit. These records shall be made available to the ODEQ upon request.

The permittee shall give 120 days prior notice to DEQ of any change planned in the biosolids/sewage sludge disposal practice.

C. 303(d) LIST ASSESSMENT

1. Water Quality Assessment and Causes of Impairment

The Category 5 303(d) list in Appendix C of the 2014 Integrated Report, indicates that this stream segment of the Arkansas River (Waterbody ID 120410010080_00), to which Coweta's WWTP discharges, is impaired. The listed cause is **Enterococcus**. A Total Maximum Daily Load (TMDL) for this stream segment of the Arkansas River has been completed in October 2008 and a wasteload for Enterococci has been assigned to the facility.

2. 303(d) List-Related Permitting Actions

Where impairments are listed, EPA Region 6 policy requires that the draft permit include WQ-based limits or a monitoring and reporting requirement for the listed pollutants if present in the discharge, and a re-opener clause as permit conditions. Therefore, the following permitting actions are taken according to the listed impairments:

- **Enterococci**

  While the Arkansas River is listed as impaired for Enterococci; in accordance with OAC 252:690-3-86(d), the permit may contain limitations of E. coli as a surrogate for Enterococci. Year round control of E. coli established in Section V.B.4.a of the draft permit limits the discharge of bacteria in the receiving stream

- **Re-opener Clause**

  A re-opener clause is included in the permit to allow for modification and/or reissuance to require additional monitoring and/or effluent limitations where actual or potential exceedances of State water quality criteria are determined to be the result of the permittee's discharge to the receiving water(s), or a revised Total Maximum Daily Load is established for the receiving water(s). Modification and/or reissuance of the permit shall follow regulations listed at 40 CFR 124.5.

D. ANTIDEGRADATION REQUIREMENTS

Because no antidegradation restrictions are listed in Appendix A of the OWQS for this water body, implementation of the State of Oklahoma antidegradation policy, as described at OAC 785:46, Subchapter 13, states that no special requirements beyond Tier 1 protection (maintenance and protection of designated uses, as herein described) are necessary.

E. PROTECTION OF ENDANGERED AND THREATENED SPECIES AND CRITICAL HABITAT

The discharge location is located in waters identified as sensitive by the United States Fish and Wildlife Service (USFWS) for endangered or candidate species or critical habitat. This is a permit renewal of an existing discharge, and there is no proposed increase in discharge flow. The reissuing of the permit is not likely to adversely affect a federally listed species, or a designated critical habitat. Therefore, notification to the USFWS is not necessary.

F. RE-OPENER CLAUSE

A re-opener clause is included in the permit.

VI. SUMMARY OF PROPOSED PERMIT EFFLUENT LIMITATIONS

A. GENERAL

In accordance with 40 CFR 122.44(a), (d), and (l), pollutant limitations are established in the draft permit based on the Water Quality Management Plan (208 Plan) for this facility. Mass loading limitations are calculated using the facility's design average daily flow of **0.76 mgd**, which is less than that of 3.0 mgd as specified in the 208 plan, and the following equation:

Mass loading limit (in lbs/day) = Concentration limit (in mg/l) × $Q_{e(D)}$ (permitted flow in mgd) × 8.34

B. OUTFALL 001

1. Final Limitations

Final limits and reporting requirements are effective on the effective date of the permit:

i. Final Concentration Limitations (mg/l) and Reporting Requirements (Outfall 001)

Effluent Characteristic [a]		Water Quality Standards		Previous Permit		Draft Permit	
		Monthly Average	Weekly Average	Monthly Average	Weekly Average	Monthly Average	Weekly Average
BOD_5	Year round	30	45	30	45	30	45
TSS	Year round	90	135	90	135	90	135
Fecal Coliform (colonies/100 ml)	May – Sep	---	---	200 (geo. mean)	400 (daily max)	**Discontinued**	
E. coli (MPN/100 ml)	May – Sep	126 (geo. mean)	406 (daily max)	---	---	**126 (geo. mean)**	**406 (daily max)**
	Oct – Apr	630 (geo. mean)	2,030 (daily max)	---	---	**630 (geo. mean)**	**2,030 (daily max)**
Total Residual Chlorine (TRC)	Year round	Instantaneous Maximum: No measureable [b]		Instantaneous Maximum: No measureable [b]		Instantaneous Maximum: No measureable [b]	
pH (standard units)	Year round	6.5 to 9.0		6.5 to 9.0		6.5 to 9.0	

[a] Units are mg/l, unless otherwise specified.
[b] No measurable is defined as less than 0.1 mg/l.

ii. Final Monthly Average Mass Loading Limitations (lbs/day) and Reporting Requirements (Outfall 001)

Effluent Characteristic		Water Quality Standards	Previous Permit	Draft Permit
Flow (mgd)	Year round	---	Report	Report
BOD_5	Year round	190.2	190.2	190.2
TSS	Year round	570.5	570.5	570.5

iii. Final Monitoring Requirements and Sample Types (Outfall 001)

Effluent Characteristic		Previous OPDES Permit		Draft Permit	
		Measurement Frequency	Sample Type	Measurement Frequency	Sample Type
Flow	Year round	7 per week	Totalized	7 per week	Totalized
BOD_5	Year round	3 per month	3-hour comp	3 per month	3-hour comp
TSS	Year round	3 per month	3-hour comp	3 per month	3-hour comp
Fecal Coliform	May – Sep	2/week	Grab	**Discontinued**	
E. coli	May – Sep	---	---	**2/week** [a]	Grab
	Oct – Apr	---	---	**1/week** [b]	Grab
Total Residual Chlorine (TRC)	Year round	Daily	Grab	Daily	Grab
pH	Year round	2 per week	Grab	2 per week	Grab

[a] E. coli monitoring frequency for PBCR in accordance with OAC 252:690-3-89(a)(3)(A).
[b] E. coli monitoring frequency for SBCR in accordance with OAC 252: 690-3-89(a)(3)(B).

VII. SUMMARY OF CHANGES FROM PREVIOUS PERMIT

- Bacteria limits of fecal coliform in previous permit have been replaced by E. coli limits (126 MPN/100 ml monthly geometric mean, 406 MPN/100 ml daily max) due to changes in the Water Quality Standards (OAC 785:45).
- E. coli limits (630 MPN/100 ml monthly geometric mean, 2030 MPN/100 ml daily max) added for the months of October through April to protect SBCR beneficial use as the Arkansas River is impaired for bacteria.
- Added monitoring frequency of 1/week for E. coli for the months of October through April.

VIII. REVIEW BY OTHER AGENCIES AND FINAL DETERMINATION

A draft permit and draft public notice will be sent to the District Engineer, Corps of Engineers, State Historical Preservation Office and to the Field Supervisor of the U.S. Fish and Wildlife Service upon the publication of the notice. If comments are received from these agencies or other State or Federal agencies with jurisdiction over fish, wildlife, or public health, the permit may be denied or additional conditions may be included in accordance with regulations promulgated at 40 CFR 124.59.

The public notice describes the procedures for the formulation of final determinations.

Attachment 7.

FACT Environmental Effects Matrix

Appendix A
F A C T Environmental Effects Matrix

		Alternative 1			Alternative 2			Alternative 3			Alternative 4		
		NLA	MA	LA	NLA	MA	LA	NLA	MA	LA	NLA	MA	LA
106 NHPA	Historical Properties (SHPO/TPHO)	X			X			X					
	State Archaeologist	X			X			X					
	BIA	X			X			X					
	Tribes/Nations	X			X			X					
ESA 1973	USFWS/IPAC	X			X			X					
CWA 1977	Wetlands	X			X			X					
	Storm Water Pollution Prevention	X			X			X					
	Section 404 Permit (USACOE)	X			X			X					
	Sole Source Aquifers		N/A			N/A			N/A				
EO11988	FloodPlains					?							
	Real Property (facilities)		N/A			N/A			N/A				
CAA 1970	Air Quality	X			X			X					
	Petroleum on-site storage		N/A			N/A			N/A				
SWDA1965	Solidwaste Disposal	X			X			X					
RCRA	Hazardous Substances		N/A			N/A			N/A				
EO 12898	Environmental Justice	X			X			X					
	Socioeconomics	X			X			X					
NCA 1972	Noise	X			X			X					
WA 1996	Wilderness Areas		N/A			N/A			N/A				
WSRA 1968	Wild and Scenic Rivers		N/A			N/A			N/A				
	Recreational Areas		N/A			N/A			N/A				
	Public Lands		N/A			N/A			N/A				
	Parks		N/A			N/A			N/A				
FPPA 1981	Prime Farmland		N/A			N/A			N/A				
CZMA 1972	Coastal		N/A			N/A			N/A				

NLA	Not likely to affect
MA	May affect
LA	Likely to affect

106 NHPA	National Historic Preservation Act of 1966
ESA 1973	Endangered Species Act of 1973
CWA 1977	Clean Water Act updated 1987
EO11988	Executive Order 11988 Floodplain Management 1977
CAA 1970	Clean Air Act amended 1990
SWDA1965	Solid Waste Disposal Act 1965
RCRA	Resource Conservation and Recovery Act
EO 12898	Executive Order 12898 Actions to Address Environmental Justice in Minority Populations and Low-Income Populations 1994
NCA 1972	Noise Control Act 1972
WA 1996	Wilderness Act of 1996
WSRA 1968	Wild and Scenic Rivers Act of 1968
FPPA 1981	Farmland Protection Policy Act of 1981
CZMA 1972	Coastal Zone Management Act of 1972

Attachment 8.

Alternative 1 Cost Estimate

Coweta WWTP
Alternative 1 - Esitmated Costs

Item Description	Item Cost
Headworks (Pump(s), Bar Screen(s), Grit Removal)	$ 2,500,000.00
Aeration Basin Tanks (foundation, concrete and reinfocement)	$ 2,050,000.00
Aeration Basin Equipment (Blowers and Diffusers)	$ 750,000.00
Digester Basin Tanks (foundation, concrete and reinfocement)	$ 550,000.00
Digester Equipment (Blowers and Diffusers)	$ 400,000.00
Secondary Clarifiers (Including RAS/WAS)	$ 1,050,000.00
Yard Piping	$ 700,000.00
SCADA	$ 150,000.00
Chlorination Basin Modification	$ 150,000.00
Lab Building	$ 120,000.00
FEB Basin	$ 500,000.00
Sludge Drying Beds	$ 200,000.00
Electrical	$ 600,000.00
TOTAL ESTIMATED CONSTRUCTION COST	**$ 9,720,000.00**
Contingency (10%)	$ 972,000.00
Engineering	$ 583,200.00
Environmental Information Document	$ 12,000.00
Construction Inspection	$ 184,680.00
Sludge Management Plan	$ 8,500.00
Survey	$ 5,000.00
Legal	$ 6,000.00
ODEQ Permitting	$ 6,000.00
TOTAL ESTIMATED PROJECT COST	**$ 11,497,380.00**

PRESENT WORTH ANALYSIS	
Initial Capital Cost	**$ 11,497,380.00**
Annual O&M Costs	
Labor (WWTP Only)	$ 46,000.00
Electric/Utilities	$ 164,353.40
Repairs/Maintenance	$ 8,500.00
Supplies/Misc.	$ 2,500.00
Chemical (Chlorination/Dechlorination)	$ 15,000.00
Sludge Disposal	$ 6,000.00
Annual O&M Subtotal	$ 242,353.40
30-YR PRESENT WORTH OF ANNUAL O&M COSTS	**$ 5,820,320.02**
(P|A,i=1.5%, n=30)	
PRESENT WORTH ESTIMATED PROJECT	**$ 17,317,700.02**

Attachment 9.

Alternative 2 Cost Estimate

Coweta WWTP
Alternative 2 - Esitmated Costs

Item Description	Item Cost
Headworks (Pump(s), Bar Screen(s), Grit Removal	$ 2,500,000.00
Modification of Cell #1 (Concrete, structural Steel Only)	$ 1,872,000.00
Aeration Basin Equipment (Blowers and Diffusers)	$ 650,000.00
Digester Equipment (Blowers and Diffusers)	$ 400,000.00
Secondary Clarifiers (Including RAS/WAS)	$ 2,050,000.00
Yard Piping	$ 700,000.00
SCADA	$ 150,000.00
Chlorination Basin Modification	$ 150,000.00
Lab Building	$ 120,000.00
Sludge Drying Beds	$ 200,000.00
Electrical	$ 600,000.00
TOTAL ESTIMATED CONSTRUCTION COST	**$ 9,392,000.00**
Contingency (10%)	$ 939,200.00
Engineering	$ 563,520.00
Environmental Information Document	$ 12,000.00
Construction Inspection	$ 178,448.00
Sludge Management Plan	$ 8,500.00
Survey	$ 5,000.00
Legal	$ 6,000.00
ODEQ Permitting	$ 6,000.00
TOTAL ESTIMATED PROJECT COST	**$ 11,110,668.00**

PRESENT WORTH ANALYSIS	
Initial Capital Cost	**$ 11,110,668.00**
Annual O&M Costs	
Labor (WWTP Only)	$ 46,000.00
Electric/Utilities	$ 164,353.40
Repairs/Maintenance	$ 8,500.00
Supplies/Misc.	$ 2,500.00
Chemical (Chlorination/Dechlorination)	$ 15,000.00
Sludge Disposal	$ 6,000.00
Annual O&M Subtotal	$ 242,353.40
30-YR PRESENT WORTH OF ANNUAL O&M COSTS	**$ 5,820,320.02**
(P|A,i=1.5%, n=30)	
PRESENT WORTH ESTIMATED PROJECT	**$ 16,930,988.02**

Attachment 10.

Alternative 3 Cost Estimate

Coweta WWTP
Alternative 3 - Esitmated Costs

Item Description	Item Cost
Headworks (Pump(s), Bar Screen(s), Grit Removal)	$ 2,500,000.00
SBR Tanks (foundation, concrete and reinfocement)	$ 2,050,000.00
Aeration Equipment (Blowers and Diffusers)	$ 650,000.00
Digester Basin Tanks (foundation, concrete and reinfocement)	$ 550,000.00
Digester Equipment (Blowers and Diffusers)	$ 400,000.00
Equilization basin	$ 2,000,000.00
Yard Piping	$ 700,000.00
SCADA	$ 150,000.00
Chlorination Basin Modification	$ 150,000.00
Lab Building	$ 120,000.00
FEB basin	$ 500,000.00
Sludge Drying Beds	$ 200,000.00
Electrical	$ 600,000.00
TOTAL ESTIMATED CONSTRUCTION COST	**$ 10,570,000.00**
Contingency (10%)	$ 1,057,000.00
Engineering	$ 634,200.00
Environmental Information Document	$ 12,000.00
Construction Inspection	$ 200,830.00
Sludge Management Plan	$ 8,500.00
Survey	$ 5,000.00
Legal	$ 6,000.00
ODEQ Permitting	$ 6,000.00
TOTAL ESTIMATED PROJECT COST	**$ 12,499,530.00**

PRESENT WORTH ANALYSIS	
Initial Capital Cost	**$ 12,499,530.00**
Annual O&M Costs	
Labor (WWTP Only)	$ 46,000.00
Electric/Utilities	$ 142,131.28
Repairs/Maintenance	$ 10,000.00
Supplies/Misc.	$ 2,500.00
Chemical (Chlorination/Dechlorination)	$ 15,000.00
Sludge Disposal	$ 6,000.00
Annual O&M Subtotal	$ 221,631.28
30-YR PRESENT WORTH OF ANNUAL O&M COSTS	**$ 5,322,660.81**
(P|A,i=1.5%, n=30)	
PRESENT WORTH ESTIMATED PROJECT	**$ 17,822,190.81**

Attachment 11.

Proposed WWTP Layout

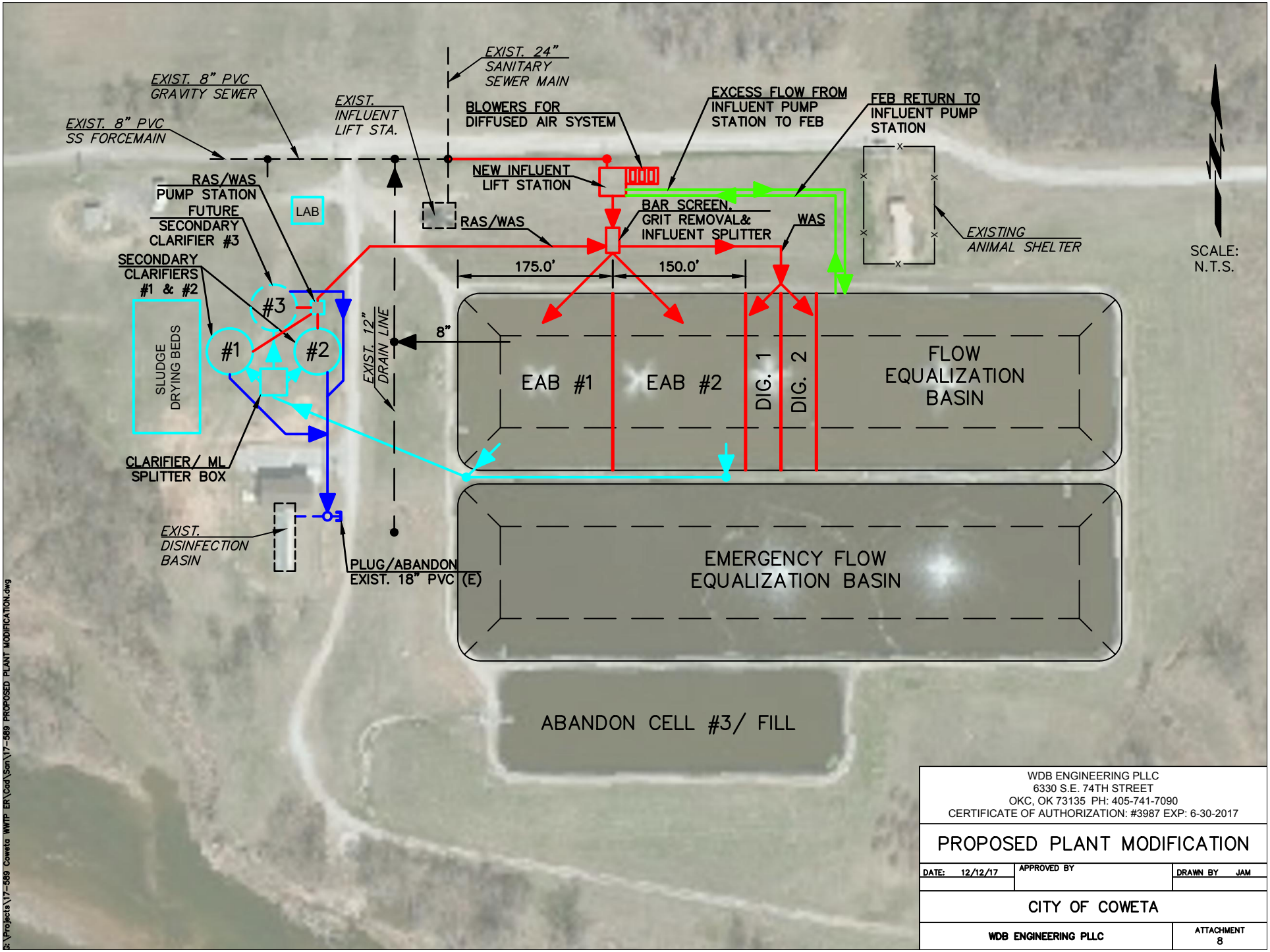

WDB ENGINEERING PLLC
6330 S.E. 74TH STREET
OKC, OK 73135 PH: 405-741-7090
CERTIFICATE OF AUTHORIZATION: #3987 EXP: 6-30-2017

PROPOSED PLANT MODIFICATION

DATE: 12/12/17	APPROVED BY	DRAWN BY JAM

CITY OF COWETA

WDB ENGINEERING PLLC	ATTACHMENT 8

S:\Projects\17-589 Coweta WWTP ER\Cad\Scn\17-589 PROPOSED PLANT MODIFICATION.dwg

Attachment 12.

US Fish and Wildlife Service (USFWS) Correspondence

December 10, 2018

U.S. Department of Interior
Fish & Wildlife Service
Ecological Services
9014 East 21st St.
Tulsa, OK 74129

To Whom It May Concern:

Re: Wastewater Treatment Plant Project to Serve the City of Coweta

The Coweta Public Works Authority (CPWA) owns a publicly owned wastewater treatment works (POTW) that serves the residents of the City of Coweta. The POTW consists of a wastewater collection system, and wastewater treatment plant (WWTP) utilizing flow-through lagoons equipped with mechanical aeration followed by a polishing pond, and disinfection basin.

The CPWA is projected to grow at a pace exceeding the state average for the next 20 years. The CPWA is expanding their wastewater treatment plant to meet the projected growth. The project will be funded through a loan from the Oklahoma Water Resources Board (OWRB) - Clean Water State Revolving Fund (CWSRF) in the amount of $11,308,168. Compliance with the National Environmental Protection Act of 1969 (NEPA) and the Environmental Review procedures for CWSRF projects is required on this project.

The proposed project consists of modifying and upgrading the existing WWTP to accommodate an average daily flow up to 1.5 MGD. The proposed project includes: a new influent lift station; lagoon system improvements; aeration basin improvements; two (2) new aerobic sludge digesters; a new flow equalization basin; two (2) new secondary clarifiers, an activated sludge pump station; sludge drying beds improvements; and disinfection basin modifications.

The project location is the N½, SW1/4, Section 30, Township 17 North, Range 16 East, Indian Meridian, Wagoner County, Oklahoma. All construction will be on the existing plant site which is mowed and maintained by CPWA staff. **Location map is included.**

On-site inspections will be carried out while construction is in progress. No individuals will be displaced because of this project. To complete the environmental review, we would appreciate a written response on the proposed project from your agency. **Please comment on any agency areas of concern.** We do not anticipate that the proposed project will have a significant impact on the environment and appreciate your assistance and response.

Sincerely,

David Wyatt, P.E.
WDB Engineering, PLLC.

United States Department of the Interior

FISH AND WILDLIFE SERVICE
Oklahoma Ecological Services Field Office
9014 East 21st Street
Tulsa, OK 74129-1428
Phone: (918) 581-7458 Fax: (918) 581-7467
http://www.fws.gov/southwest/es/Oklahoma/

In Reply Refer To: January 31, 2019
Consultation Code: 02EKOK00-2019-SLI-0837
Event Code: 02EKOK00-2019-E-01904
Project Name: Coweta Wastewater Treatment Plant Upgrade

Subject: List of threatened and endangered species that may occur in your proposed project location, and/or may be affected by your proposed project

To Whom It May Concern:

The enclosed species list identifies threatened, endangered, proposed and candidate species, as well as proposed and final designated critical habitat, that may occur within the boundary of your proposed project and/or may be affected by your proposed project. The species list fulfills the requirements of the U.S. Fish and Wildlife Service (Service) under section 7(c) of the Endangered Species Act (Act) of 1973, as amended (16 U.S.C. 1531 *et seq.*).

New information based on updated surveys, changes in the abundance and distribution of species, changed habitat conditions, or other factors could change this list. Please feel free to contact us if you need more current information or assistance regarding the potential impacts to federally proposed, listed, and candidate species and federally designated and proposed critical habitat. Please note that under 50 CFR 402.12(e) of the regulations implementing section 7 of the Act, the accuracy of this species list should be verified after 90 days. This verification can be completed formally or informally as desired. The Service recommends that verification be completed by visiting the ECOS-IPaC website at regular intervals during project planning and implementation for updates to species lists and information. An updated list may be requested through the ECOS-IPaC system by completing the same process used to receive the enclosed list.

The purpose of the Act is to provide a means whereby threatened and endangered species and the ecosystems upon which they depend may be conserved. Under sections 7(a)(1) and 7(a)(2) of the Act and its implementing regulations (50 CFR 402 *et seq.*), Federal agencies are required to utilize their authorities to carry out programs for the conservation of threatened and endangered species and to determine whether projects may affect threatened and endangered species and/or designated critical habitat.

A Biological Assessment is required for construction projects (or other undertakings having similar physical impacts) that are major Federal actions significantly affecting the quality of the human environment as defined in the National Environmental Policy Act (42 U.S.C. 4332(2)(c)). For projects other than major construction activities, the Service suggests that a biological evaluation similar to a Biological Assessment be prepared to determine whether the project may affect listed or proposed species and/or designated or proposed critical habitat. Recommended contents of a Biological Assessment are described at 50 CFR 402.12.

If a Federal agency determines, based on the Biological Assessment or biological evaluation, that listed species and/or designated critical habitat may be affected by the proposed project, the agency is required to consult with the Service pursuant to 50 CFR 402. In addition, the Service recommends that candidate species, proposed species and proposed critical habitat be addressed within the consultation. More information on the regulations and procedures for section 7 consultation, including the role of permit or license applicants, can be found in the "Endangered Species Consultation Handbook" at:

http://www.fws.gov/endangered/esa-library/pdf/TOC-GLOS.PDF

Non-federal entities conducting activities that may result in take of listed species should consider seeking coverage under section 10 of the ESA, either through development of a Habitat Conservation Plan (HCP) or, by becoming a signatory to the General Conservation Plan (GCP) currently under development for the American burying beetle. Each of these mechanisms provides the means for obtaining a permit and coverage for incidental take of listed species during otherwise lawful activities.

Please be aware that bald and golden eagles are protected under the Bald and Golden Eagle Protection Act (16 U.S.C. 668 *et seq.*), and projects affecting these species may require development of an eagle conservation plan (http://www.fws.gov/windenergy/eagle_guidance.html). Additionally, wind energy projects should follow the wind energy guidelines (http://www.fws.gov/windenergy/) for minimizing impacts to migratory birds and bats.

Guidance for minimizing impacts to migratory birds for projects including communications towers (e.g., cellular, digital television, radio, and emergency broadcast) can be found at: http://www.fws.gov/migratorybirds/CurrentBirdIssues/Hazards/towers/towers.htm; http://www.towerkill.com; and http://www.fws.gov/migratorybirds/CurrentBirdIssues/Hazards/towers/comtow.html.

We appreciate your concern for threatened and endangered species. The Service encourages Federal agencies to include conservation of threatened and endangered species into their project planning to further the purposes of the Act. Please include the Consultation Tracking Number in the header of this letter with any request for consultation or correspondence about your project that you submit through our Project Review step-wise process http://www.fws.gov/southwest/es/oklahoma/OKESFO%20Permit%20Home.htm.

Attachment(s):

- Official Species List
- USFWS National Wildlife Refuges and Fish Hatcheries
- Migratory Birds
- Wetlands

Official Species List

This list is provided pursuant to Section 7 of the Endangered Species Act, and fulfills the requirement for Federal agencies to "request of the Secretary of the Interior information whether any species which is listed or proposed to be listed may be present in the area of a proposed action".

This species list is provided by:

Oklahoma Ecological Services Field Office
9014 East 21st Street
Tulsa, OK 74129-1428
(918) 581-7458

Project Summary

Consultation Code: 02EKOK00-2019-SLI-0837

Event Code: 02EKOK00-2019-E-01904

Project Name: Coweta Wastewater Treatment Plant Upgrade

Project Type: WASTEWATER FACILITY

Project Description: 1.5 MGD wastewater treatment plant upgrade of existing facility.

Project Location:

Approximate location of the project can be viewed in Google Maps: https://www.google.com/maps/place/35.92172526933105N95.65134426442046W

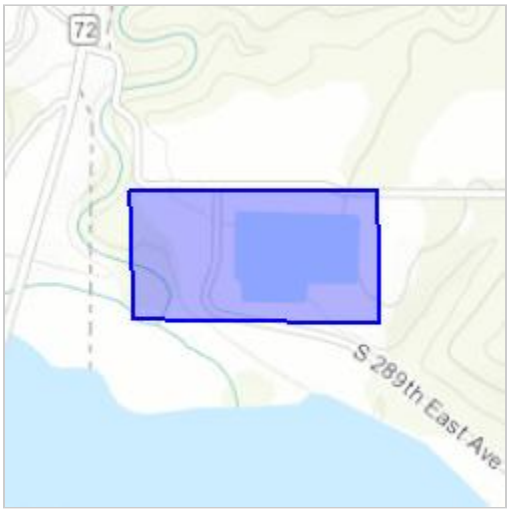

Counties: Wagoner, OK

Endangered Species Act Species

There is a total of 7 threatened, endangered, or candidate species on this species list.

Species on this list should be considered in an effects analysis for your project and could include species that exist in another geographic area. For example, certain fish may appear on the species list because a project could affect downstream species.

IPaC does not display listed species or critical habitats under the sole jurisdiction of NOAA Fisheries[1], as USFWS does not have the authority to speak on behalf of NOAA and the Department of Commerce.

See the "Critical habitats" section below for those critical habitats that lie wholly or partially within your project area under this office's jurisdiction. Please contact the designated FWS office if you have questions.

---

1. NOAA Fisheries, also known as the National Marine Fisheries Service (NMFS), is an office of the National Oceanic and Atmospheric Administration within the Department of Commerce.

Mammals

NAME	STATUS
Gray Bat *Myotis grisescens* No critical habitat has been designated for this species. Species profile: https://ecos.fws.gov/ecp/species/6329	Endangered
Northern Long-eared Bat *Myotis septentrionalis* No critical habitat has been designated for this species. Species profile: https://ecos.fws.gov/ecp/species/9045	Threatened

Birds

NAME	STATUS
Least Tern *Sterna antillarum* Population: interior pop. No critical habitat has been designated for this species. Species profile: https://ecos.fws.gov/ecp/species/8505	Endangered
Piping Plover *Charadrius melodus* Population: [Atlantic Coast and Northern Great Plains populations] - Wherever found, except those areas where listed as endangered. There is **final** critical habitat for this species. Your location is outside the critical habitat. Species profile: https://ecos.fws.gov/ecp/species/6039	Threatened
Red Knot *Calidris canutus rufa* No critical habitat has been designated for this species. Species profile: https://ecos.fws.gov/ecp/species/1864	Threatened
Whooping Crane *Grus americana* Population: Wherever found, except where listed as an experimental population There is **final** critical habitat for this species. Your location is outside the critical habitat. Species profile: https://ecos.fws.gov/ecp/species/758	Endangered

Insects

NAME	STATUS
American Burying Beetle *Nicrophorus americanus* Population: Wherever found, except where listed as an experimental population No critical habitat has been designated for this species. Species profile: https://ecos.fws.gov/ecp/species/66	Endangered

Critical habitats

THERE ARE NO CRITICAL HABITATS WITHIN YOUR PROJECT AREA UNDER THIS OFFICE'S JURISDICTION.

USFWS National Wildlife Refuge Lands And Fish Hatcheries

Any activity proposed on lands managed by the National Wildlife Refuge system must undergo a 'Compatibility Determination' conducted by the Refuge. Please contact the individual Refuges to discuss any questions or concerns.

THERE ARE NO REFUGE LANDS OR FISH HATCHERIES WITHIN YOUR PROJECT AREA.

Migratory Birds

Certain birds are protected under the Migratory Bird Treaty Act[1] and the Bald and Golden Eagle Protection Act[2].

Any person or organization who plans or conducts activities that may result in impacts to migratory birds, eagles, and their habitats should follow appropriate regulations and consider implementing appropriate conservation measures, as described below.

---

1. The Migratory Birds Treaty Act of 1918.
2. The Bald and Golden Eagle Protection Act of 1940.
3. 50 C.F.R. Sec. 10.12 and 16 U.S.C. Sec. 668(a)

THERE ARE NO FWS MIGRATORY BIRDS OF CONCERN WITHIN THE VICINITY OF YOUR PROJECT AREA.

Migratory Birds FAQ

Tell me more about conservation measures I can implement to avoid or minimize impacts to migratory birds.
Nationwide Conservation Measures describes measures that can help avoid and minimize impacts to all birds at any location year round. Implementation of these measures is particularly important when birds are most likely to occur in the project area. When birds may be breeding in the area, identifying the locations of any active nests and avoiding their destruction is a very helpful impact minimization measure. To see when birds are most likely to occur and be breeding in your project area, view the Probability of Presence Summary. Additional measures and/or permits may be advisable depending on the type of activity you are conducting and the type of infrastructure or bird species present on your project site.

What does IPaC use to generate the migratory birds potentially occurring in my specified location?
The Migratory Bird Resource List is comprised of USFWS Birds of Conservation Concern (BCC) and other species that may warrant special attention in your project location.

The migratory bird list generated for your project is derived from data provided by the Avian Knowledge Network (AKN). The AKN data is based on a growing collection of survey, banding, and citizen science datasets and is queried and filtered to return a list of those birds reported as occurring in the 10km grid cell(s) which your project intersects, and that have been identified as warranting special attention because they are a BCC species in that area, an eagle (Eagle Act requirements may apply), or a species that has a particular vulnerability to offshore activities or development.

Again, the Migratory Bird Resource list includes only a subset of birds that may occur in your project area. It is not representative of all birds that may occur in your project area. To get a list of all birds potentially present in your project area, please visit the E-bird Explore Data Tool.

What does IPaC use to generate the probability of presence graphs for the migratory birds potentially occurring in my specified location?
The probability of presence graphs associated with your migratory bird list are based on data provided by the Avian Knowledge Network (AKN). This data is derived from a growing collection of survey, banding, and citizen science datasets .

Probability of presence data is continuously being updated as new and better information becomes available. To learn more about how the probability of presence graphs are produced and how to interpret them, go the Probability of Presence Summary and then click on the "Tell me about these graphs" link.

How do I know if a bird is breeding, wintering, migrating or present year-round in my project area?
To see what part of a particular bird's range your project area falls within (i.e. breeding, wintering, migrating or year-round), you may refer to the following resources: The Cornell Lab of Ornithology All About Birds Bird Guide, or (if you are unsuccessful in locating the bird of interest there), the Cornell Lab of Ornithology Neotropical Birds guide. If a bird on your migratory bird species list has a breeding season associated with it, if that bird does occur in your project area, there may be nests present at some point within the timeframe specified. If "Breeds elsewhere" is indicated, then the bird likely does not breed in your project area.

What are the levels of concern for migratory birds?
Migratory birds delivered through IPaC fall into the following distinct categories of concern:

1. "BCC Rangewide" birds are Birds of Conservation Concern (BCC) that are of concern throughout their range anywhere within the USA (including Hawaii, the Pacific Islands, Puerto Rico, and the Virgin Islands);
2. "BCC - BCR" birds are BCCs that are of concern only in particular Bird Conservation Regions (BCRs) in the continental USA; and
3. "Non-BCC - Vulnerable" birds are not BCC species in your project area, but appear on your list either because of the Eagle Act requirements (for eagles) or (for non-eagles) potential susceptibilities in offshore areas from certain types of development or activities (e.g. offshore energy development or longline fishing).

Although it is important to try to avoid and minimize impacts to all birds, efforts should be made, in particular, to avoid and minimize impacts to the birds on this list, especially eagles and BCC species of rangewide concern. For more information on conservation measures you can implement to help avoid and minimize migratory bird impacts and requirements for eagles, please see the FAQs for these topics.

Details about birds that are potentially affected by offshore projects

For additional details about the relative occurrence and abundance of both individual bird species and groups of bird species within your project area off the Atlantic Coast, please visit the Northeast Ocean Data Portal. The Portal also offers data and information about other taxa besides birds that may be helpful to you in your project review. Alternately, you may download the bird model results files underlying the portal maps through the NOAA NCCOS Integrative Statistical Modeling and Predictive Mapping of Marine Bird Distributions and Abundance on the Atlantic Outer Continental Shelf project webpage.

Bird tracking data can also provide additional details about occurrence and habitat use throughout the year, including migration. Models relying on survey data may not include this information. For additional information on marine bird tracking data, see the Diving Bird Study and the nanotag studies or contact Caleb Spiegel or Pam Loring.

What if I have eagles on my list?
If your project has the potential to disturb or kill eagles, you may need to obtain a permit to avoid violating the Eagle Act should such impacts occur.

Proper Interpretation and Use of Your Migratory Bird Report
The migratory bird list generated is not a list of all birds in your project area, only a subset of birds of priority concern. To learn more about how your list is generated, and see options for identifying what other birds may be in your project area, please see the FAQ “What does IPaC use to generate the migratory birds potentially occurring in my specified location”. Please be aware this report provides the “probability of presence” of birds within the 10 km grid cell(s) that overlap your project; not your exact project footprint. On the graphs provided, please also look carefully at the survey effort (indicated by the black vertical bar) and for the existence of the “no data” indicator (a red horizontal bar). A high survey effort is the key component. If the survey effort is high, then the probability of presence score can be viewed as more dependable. In contrast, a low survey effort bar or no data bar means a lack of data and, therefore, a lack of certainty about presence of the species. This list is not perfect; it is simply a starting point for identifying what birds of concern have the potential to be in your project area, when they might be there, and if they might be breeding (which means nests might be present). The list helps you know what to look for to confirm presence, and helps guide you in knowing when to implement conservation measures to avoid or minimize potential impacts from your project activities, should presence be confirmed. To learn more about conservation measures, visit the FAQ “Tell me about conservation measures I can implement to avoid or minimize impacts to migratory birds” at the bottom of your migratory bird trust resources page.

Wetlands

Impacts to NWI wetlands and other aquatic habitats may be subject to regulation under Section 404 of the Clean Water Act, or other State/Federal statutes.

For more information please contact the Regulatory Program of the local U.S. Army Corps of Engineers District.

Please note that the NWI data being shown may be out of date. We are currently working to update our NWI data set. We recommend you verify these results with a site visit to determine the actual extent of wetlands on site.

FRESHWATER POND

- PUBK

RIVERINE

- R2UBH

Attachment 13.

Oklahoma Tourism and Recreation Department Correspondence

December 10, 2018

Oklahoma State Parks
Okla. Tourism & Recreation Dept.
P.O. Box 52002
Oklahoma City, OK 73152

To Whom It May Concern:

Re: Wastewater Treatment Plant Project to Serve the City of Coweta

The Coweta Public Works Authority (CPWA) owns a publicly owned wastewater treatment works (POTW) that serves the residents of the City of Coweta. The POTW consists of a wastewater collection system, and wastewater treatment plant (WWTP) utilizing flow-through lagoons equipped with mechanical aeration followed by a polishing pond, and disinfection basin.

The CPWA is projected to grow at a pace exceeding the state average for the next 20 years. The CPWA is expanding their wastewater treatment plant to meet the projected growth. The project will be funded through a loan from the Oklahoma Water Resources Board (OWRB) - Clean Water State Revolving Fund (CWSRF) in the amount of $11,308,168. Compliance with the National Environmental Protection Act of 1969 (NEPA) and the Environmental Review procedures for CWSRF projects is required on this project.

The proposed project consists of modifying and upgrading the existing WWTP to accommodate an average daily flow up to 1.5 MGD. The proposed project includes: a new influent lift station; lagoon system improvements; aeration basin improvements; two (2) new aerobic sludge digesters; a new flow equalization basin; two (2) new secondary clarifiers, an activated sludge pump station; sludge drying beds improvements; and disinfection basin modifications.

The project location is the N½, SW1/4, Section 30, Township 17 North, Range 16 East, Indian Meridian, Wagoner County, Oklahoma. All construction will be on the existing plant site which is mowed and maintained by CPWA staff. **Location map is included.**

On-site inspections will be carried out while construction is in progress. No individuals will be displaced because of this project. To complete the environmental review, we would appreciate a written response on the proposed project from your agency. **Please comment on any agency areas of concern.** We do not anticipate that the proposed project will have a significant impact on the environment and appreciate your assistance and response.

Sincerely,

David Wyatt, P.E.
WDB Engineering, PLLC.

Attachment 14.

US Department of Agriculture (USDA) Natural Resources Conservation Service (NRCS) Correspondence

December 10, 2018

State Conservationist
U.S. Dept. of Agriculture / Nat. Resources Conserv. Serv.
Okla. State Office
100 USDA, Suite 206
Stillwater, OK 74074-2655

To Whom It May Concern:

Re: Wastewater Treatment Plant Project to Serve the City of Coweta

The Coweta Public Works Authority (CPWA) owns a publicly owned wastewater treatment works (POTW) that serves the residents of the City of Coweta. The POTW consists of a wastewater collection system, and wastewater treatment plant (WWTP) utilizing flow-through lagoons equipped with mechanical aeration followed by a polishing pond, and disinfection basin.

The CPWA is projected to grow at a pace exceeding the state average for the next 20 years. The CPWA is expanding their wastewater treatment plant to meet the projected growth. The project will be funded through a loan from the Oklahoma Water Resources Board (OWRB) - Clean Water State Revolving Fund (CWSRF) in the amount of $11,308,168. Compliance with the National Environmental Protection Act of 1969 (NEPA) and the Environmental Review procedures for CWSRF projects is required on this project.

The proposed project consists of modifying and upgrading the existing WWTP to accommodate an average daily flow up to 1.5 MGD. The proposed project includes: a new influent lift station; lagoon system improvements; aeration basin improvements; two (2) new aerobic sludge digesters; a new flow equalization basin; two (2) new secondary clarifiers, an activated sludge pump station; sludge drying beds improvements; and disinfection basin modifications.

The project location is the N½, SW1/4, Section 30, Township 17 North, Range 16 East, Indian Meridian, Wagoner County, Oklahoma. All construction will be on the existing plant site which is mowed and maintained by CPWA staff. **Location map is included.**

On-site inspections will be carried out while construction is in progress. No individuals will be displaced because of this project. To complete the environmental review, we would appreciate a written response on the proposed project from your agency. **Please comment on any agency areas of concern.** We do not anticipate that the proposed project will have a significant impact on the environment and appreciate your assistance and response.

Sincerely,

David Wyatt, P.E.
WDB Engineering, PLLC.

Attachment 15.

NRCS Web Soil Survey Map

United States Department of Agriculture

NRCS

Natural Resources Conservation Service

A product of the National Cooperative Soil Survey, a joint effort of the United States Department of Agriculture and other Federal agencies, State agencies including the Agricultural Experiment Stations, and local participants

Custom Soil Resource Report for Wagoner County, Oklahoma

City of Coweta WWTP Improvements Environmental Review

February 19, 2019

Preface

Soil surveys contain information that affects land use planning in survey areas. They highlight soil limitations that affect various land uses and provide information about the properties of the soils in the survey areas. Soil surveys are designed for many different users, including farmers, ranchers, foresters, agronomists, urban planners, community officials, engineers, developers, builders, and home buyers. Also, conservationists, teachers, students, and specialists in recreation, waste disposal, and pollution control can use the surveys to help them understand, protect, or enhance the environment.

Various land use regulations of Federal, State, and local governments may impose special restrictions on land use or land treatment. Soil surveys identify soil properties that are used in making various land use or land treatment decisions. The information is intended to help the land users identify and reduce the effects of soil limitations on various land uses. The landowner or user is responsible for identifying and complying with existing laws and regulations.

Although soil survey information can be used for general farm, local, and wider area planning, onsite investigation is needed to supplement this information in some cases. Examples include soil quality assessments (http://www.nrcs.usda.gov/wps/portal/nrcs/main/soils/health/) and certain conservation and engineering applications. For more detailed information, contact your local USDA Service Center (https://offices.sc.egov.usda.gov/locator/app?agency=nrcs) or your NRCS State Soil Scientist (http://www.nrcs.usda.gov/wps/portal/nrcs/detail/soils/contactus/?cid=nrcs142p2_053951).

Great differences in soil properties can occur within short distances. Some soils are seasonally wet or subject to flooding. Some are too unstable to be used as a foundation for buildings or roads. Clayey or wet soils are poorly suited to use as septic tank absorption fields. A high water table makes a soil poorly suited to basements or underground installations.

The National Cooperative Soil Survey is a joint effort of the United States Department of Agriculture and other Federal agencies, State agencies including the Agricultural Experiment Stations, and local agencies. The Natural Resources Conservation Service (NRCS) has leadership for the Federal part of the National Cooperative Soil Survey.

Information about soils is updated periodically. Updated information is available through the NRCS Web Soil Survey, the site for official soil survey information.

The U.S. Department of Agriculture (USDA) prohibits discrimination in all its programs and activities on the basis of race, color, national origin, age, disability, and where applicable, sex, marital status, familial status, parental status, religion, sexual orientation, genetic information, political beliefs, reprisal, or because all or a part of an individual's income is derived from any public assistance program. (Not all prohibited bases apply to all programs.) Persons with disabilities who require

alternative means for communication of program information (Braille, large print, audiotape, etc.) should contact USDA's TARGET Center at (202) 720-2600 (voice and TDD). To file a complaint of discrimination, write to USDA, Director, Office of Civil Rights, 1400 Independence Avenue, S.W., Washington, D.C. 20250-9410 or call (800) 795-3272 (voice) or (202) 720-6382 (TDD). USDA is an equal opportunity provider and employer.

Contents

Preface.....2
How Soil Surveys Are Made.....5
Soil Map.....8
Soil Map.....9
Legend.....10
Map Unit Legend.....11
Map Unit Descriptions.....11
Wagoner County, Oklahoma.....13
Cd—Choska silt loam, 0 to 1 percent slopes, occasionally flooded.....13
KfC—Kamie fine sandy loam, 1 to 5 percent slopes.....14
M-W—Miscellaneous water.....15
OaC—Okay loam, 3 to 5 percent slopes.....16
Rc—Radley silt loam, 0 to 1 percent slopes, frequently flooded.....17
Tu—Tullahassee fine sandy loam, 0 to 1 percent slopes, frequently flooded.....19
W—Water.....21
References.....22

How Soil Surveys Are Made

Soil surveys are made to provide information about the soils and miscellaneous areas in a specific area. They include a description of the soils and miscellaneous areas and their location on the landscape and tables that show soil properties and limitations affecting various uses. Soil scientists observed the steepness, length, and shape of the slopes; the general pattern of drainage; the kinds of crops and native plants; and the kinds of bedrock. They observed and described many soil profiles. A soil profile is the sequence of natural layers, or horizons, in a soil. The profile extends from the surface down into the unconsolidated material in which the soil formed or from the surface down to bedrock. The unconsolidated material is devoid of roots and other living organisms and has not been changed by other biological activity.

Currently, soils are mapped according to the boundaries of major land resource areas (MLRAs). MLRAs are geographically associated land resource units that share common characteristics related to physiography, geology, climate, water resources, soils, biological resources, and land uses (USDA, 2006). Soil survey areas typically consist of parts of one or more MLRA.

The soils and miscellaneous areas in a survey area occur in an orderly pattern that is related to the geology, landforms, relief, climate, and natural vegetation of the area. Each kind of soil and miscellaneous area is associated with a particular kind of landform or with a segment of the landform. By observing the soils and miscellaneous areas in the survey area and relating their position to specific segments of the landform, a soil scientist develops a concept, or model, of how they were formed. Thus, during mapping, this model enables the soil scientist to predict with a considerable degree of accuracy the kind of soil or miscellaneous area at a specific location on the landscape.

Commonly, individual soils on the landscape merge into one another as their characteristics gradually change. To construct an accurate soil map, however, soil scientists must determine the boundaries between the soils. They can observe only a limited number of soil profiles. Nevertheless, these observations, supplemented by an understanding of the soil-vegetation-landscape relationship, are sufficient to verify predictions of the kinds of soil in an area and to determine the boundaries.

Soil scientists recorded the characteristics of the soil profiles that they studied. They noted soil color, texture, size and shape of soil aggregates, kind and amount of rock fragments, distribution of plant roots, reaction, and other features that enable them to identify soils. After describing the soils in the survey area and determining their properties, the soil scientists assigned the soils to taxonomic classes (units). Taxonomic classes are concepts. Each taxonomic class has a set of soil characteristics with precisely defined limits. The classes are used as a basis for comparison to classify soils systematically. Soil taxonomy, the system of taxonomic classification used in the United States, is based mainly on the kind and character of soil properties and the arrangement of horizons within the profile. After the soil

scientists classified and named the soils in the survey area, they compared the individual soils with similar soils in the same taxonomic class in other areas so that they could confirm data and assemble additional data based on experience and research.

The objective of soil mapping is not to delineate pure map unit components; the objective is to separate the landscape into landforms or landform segments that have similar use and management requirements. Each map unit is defined by a unique combination of soil components and/or miscellaneous areas in predictable proportions. Some components may be highly contrasting to the other components of the map unit. The presence of minor components in a map unit in no way diminishes the usefulness or accuracy of the data. The delineation of such landforms and landform segments on the map provides sufficient information for the development of resource plans. If intensive use of small areas is planned, onsite investigation is needed to define and locate the soils and miscellaneous areas.

Soil scientists make many field observations in the process of producing a soil map. The frequency of observation is dependent upon several factors, including scale of mapping, intensity of mapping, design of map units, complexity of the landscape, and experience of the soil scientist. Observations are made to test and refine the soil-landscape model and predictions and to verify the classification of the soils at specific locations. Once the soil-landscape model is refined, a significantly smaller number of measurements of individual soil properties are made and recorded. These measurements may include field measurements, such as those for color, depth to bedrock, and texture, and laboratory measurements, such as those for content of sand, silt, clay, salt, and other components. Properties of each soil typically vary from one point to another across the landscape.

Observations for map unit components are aggregated to develop ranges of characteristics for the components. The aggregated values are presented. Direct measurements do not exist for every property presented for every map unit component. Values for some properties are estimated from combinations of other properties.

While a soil survey is in progress, samples of some of the soils in the area generally are collected for laboratory analyses and for engineering tests. Soil scientists interpret the data from these analyses and tests as well as the field-observed characteristics and the soil properties to determine the expected behavior of the soils under different uses. Interpretations for all of the soils are field tested through observation of the soils in different uses and under different levels of management. Some interpretations are modified to fit local conditions, and some new interpretations are developed to meet local needs. Data are assembled from other sources, such as research information, production records, and field experience of specialists. For example, data on crop yields under defined levels of management are assembled from farm records and from field or plot experiments on the same kinds of soil.

Predictions about soil behavior are based not only on soil properties but also on such variables as climate and biological activity. Soil conditions are predictable over long periods of time, but they are not predictable from year to year. For example, soil scientists can predict with a fairly high degree of accuracy that a given soil will have a high water table within certain depths in most years, but they cannot predict that a high water table will always be at a specific level in the soil on a specific date.

After soil scientists located and identified the significant natural bodies of soil in the survey area, they drew the boundaries of these bodies on aerial photographs and

identified each as a specific map unit. Aerial photographs show trees, buildings, fields, roads, and rivers, all of which help in locating boundaries accurately.

Soil Map

The soil map section includes the soil map for the defined area of interest, a list of soil map units on the map and extent of each map unit, and cartographic symbols displayed on the map. Also presented are various metadata about data used to produce the map, and a description of each soil map unit.

Custom Soil Resource Report
Soil Map

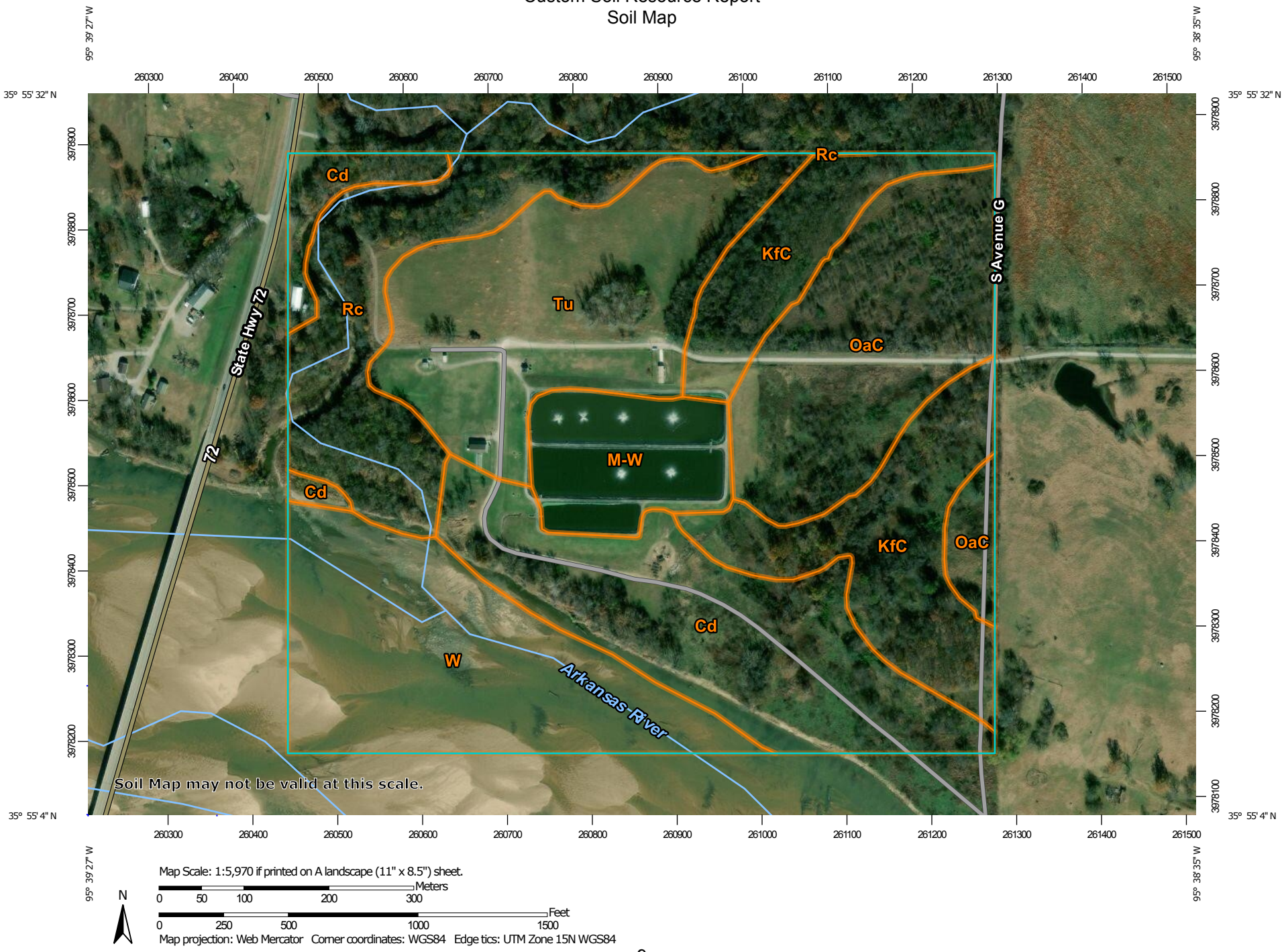

Map Scale: 1:5,970 if printed on A landscape (11" x 8.5") sheet.

Meters: 0 50 100 200 300

Feet: 0 250 500 1000 1500

N

Map projection: Web Mercator Corner coordinates: WGS84 Edge tics: UTM Zone 15N WGS84

MAP LEGEND

Area of Interest (AOI)

Area of Interest (AOI)

Soils

Soil Map Unit Polygons

Soil Map Unit Lines

Soil Map Unit Points

Special Point Features

Blowout

Borrow Pit

Clay Spot

Closed Depression

Gravel Pit

Gravelly Spot

Landfill

Lava Flow

Marsh or swamp

Mine or Quarry

Miscellaneous Water

Perennial Water

Rock Outcrop

Saline Spot

Sandy Spot

Severely Eroded Spot

Sinkhole

Slide or Slip

Sodic Spot

Spoil Area

Stony Spot

Very Stony Spot

Wet Spot

Other

Special Line Features

Water Features

Streams and Canals

Transportation

Rails

Interstate Highways

US Routes

Major Roads

Local Roads

Background

Aerial Photography

MAP INFORMATION

The soil surveys that comprise your AOI were mapped at 1:24,000.

Warning: Soil Map may not be valid at this scale.

Enlargement of maps beyond the scale of mapping can cause misunderstanding of the detail of mapping and accuracy of soil line placement. The maps do not show the small areas of contrasting soils that could have been shown at a more detailed scale.

Please rely on the bar scale on each map sheet for map measurements.

Source of Map: Natural Resources Conservation Service
Web Soil Survey URL:
Coordinate System: Web Mercator (EPSG:3857)

Maps from the Web Soil Survey are based on the Web Mercator projection, which preserves direction and shape but distorts distance and area. A projection that preserves area, such as the Albers equal-area conic projection, should be used if more accurate calculations of distance or area are required.

This product is generated from the USDA-NRCS certified data as of the version date(s) listed below.

Soil Survey Area: Wagoner County, Oklahoma
Survey Area Data: Version 14, Sep 5, 2018

Soil map units are labeled (as space allows) for map scales 1:50,000 or larger.

Date(s) aerial images were photographed: Mar 10, 2015—Nov 19, 2017

The orthophoto or other base map on which the soil lines were compiled and digitized probably differs from the background imagery displayed on these maps. As a result, some minor shifting of map unit boundaries may be evident.

Map Unit Legend

Map Unit Symbol	Map Unit Name	Acres in AOI	Percent of AOI
Cd	Choska silt loam, 0 to 1 percent slopes, occasionally flooded	26.9	18.5%
KfC	Kamie fine sandy loam, 1 to 5 percent slopes	22.3	15.3%
M-W	Miscellaneous water	8.8	6.0%
OaC	Okay loam, 3 to 5 percent slopes	22.3	15.3%
Rc	Radley silt loam, 0 to 1 percent slopes, frequently flooded	16.9	11.6%
Tu	Tullahassee fine sandy loam, 0 to 1 percent slopes, frequently flooded	24.6	16.9%
W	Water	23.7	16.3%
Totals for Area of Interest		**145.4**	**100.0%**

Map Unit Descriptions

The map units delineated on the detailed soil maps in a soil survey represent the soils or miscellaneous areas in the survey area. The map unit descriptions, along with the maps, can be used to determine the composition and properties of a unit.

A map unit delineation on a soil map represents an area dominated by one or more major kinds of soil or miscellaneous areas. A map unit is identified and named according to the taxonomic classification of the dominant soils. Within a taxonomic class there are precisely defined limits for the properties of the soils. On the landscape, however, the soils are natural phenomena, and they have the characteristic variability of all natural phenomena. Thus, the range of some observed properties may extend beyond the limits defined for a taxonomic class. Areas of soils of a single taxonomic class rarely, if ever, can be mapped without including areas of other taxonomic classes. Consequently, every map unit is made up of the soils or miscellaneous areas for which it is named and some minor components that belong to taxonomic classes other than those of the major soils.

Most minor soils have properties similar to those of the dominant soil or soils in the map unit, and thus they do not affect use and management. These are called noncontrasting, or similar, components. They may or may not be mentioned in a particular map unit description. Other minor components, however, have properties and behavioral characteristics divergent enough to affect use or to require different management. These are called contrasting, or dissimilar, components. They generally are in small areas and could not be mapped separately because of the scale used. Some small areas of strongly contrasting soils or miscellaneous areas are identified by a special symbol on the maps. If included in the database for a given area, the contrasting minor components are identified in the map unit descriptions along with some characteristics of each. A few areas of minor

components may not have been observed, and consequently they are not mentioned in the descriptions, especially where the pattern was so complex that it was impractical to make enough observations to identify all the soils and miscellaneous areas on the landscape.

The presence of minor components in a map unit in no way diminishes the usefulness or accuracy of the data. The objective of mapping is not to delineate pure taxonomic classes but rather to separate the landscape into landforms or landform segments that have similar use and management requirements. The delineation of such segments on the map provides sufficient information for the development of resource plans. If intensive use of small areas is planned, however, onsite investigation is needed to define and locate the soils and miscellaneous areas.

An identifying symbol precedes the map unit name in the map unit descriptions. Each description includes general facts about the unit and gives important soil properties and qualities.

Soils that have profiles that are almost alike make up a *soil series*. Except for differences in texture of the surface layer, all the soils of a series have major horizons that are similar in composition, thickness, and arrangement.

Soils of one series can differ in texture of the surface layer, slope, stoniness, salinity, degree of erosion, and other characteristics that affect their use. On the basis of such differences, a soil series is divided into *soil phases*. Most of the areas shown on the detailed soil maps are phases of soil series. The name of a soil phase commonly indicates a feature that affects use or management. For example, Alpha silt loam, 0 to 2 percent slopes, is a phase of the Alpha series.

Some map units are made up of two or more major soils or miscellaneous areas. These map units are complexes, associations, or undifferentiated groups.

A *complex* consists of two or more soils or miscellaneous areas in such an intricate pattern or in such small areas that they cannot be shown separately on the maps. The pattern and proportion of the soils or miscellaneous areas are somewhat similar in all areas. Alpha-Beta complex, 0 to 6 percent slopes, is an example.

An *association* is made up of two or more geographically associated soils or miscellaneous areas that are shown as one unit on the maps. Because of present or anticipated uses of the map units in the survey area, it was not considered practical or necessary to map the soils or miscellaneous areas separately. The pattern and relative proportion of the soils or miscellaneous areas are somewhat similar. Alpha-Beta association, 0 to 2 percent slopes, is an example.

An *undifferentiated group* is made up of two or more soils or miscellaneous areas that could be mapped individually but are mapped as one unit because similar interpretations can be made for use and management. The pattern and proportion of the soils or miscellaneous areas in a mapped area are not uniform. An area can be made up of only one of the major soils or miscellaneous areas, or it can be made up of all of them. Alpha and Beta soils, 0 to 2 percent slopes, is an example.

Some surveys include *miscellaneous areas*. Such areas have little or no soil material and support little or no vegetation. Rock outcrop is an example.

Wagoner County, Oklahoma

Cd—Choska silt loam, 0 to 1 percent slopes, occasionally flooded

Map Unit Setting

National map unit symbol: 3l2p
Elevation: 10 to 1,000 feet
Mean annual precipitation: 36 to 60 inches
Mean annual air temperature: 50 to 70 degrees F
Frost-free period: 190 to 300 days
Farmland classification: All areas are prime farmland

Map Unit Composition

Choska and similar soils: 80 percent
Minor components: 20 percent
Estimates are based on observations, descriptions, and transects of the mapunit.

Description of Choska

Setting

Landform: Flood-plain steps
Down-slope shape: Linear
Across-slope shape: Convex

Typical profile

A - 0 to 14 inches: silt loam
C1 - 14 to 48 inches: very fine sandy loam
C2 - 48 to 66 inches: loamy fine sand

Properties and qualities

Slope: 0 to 1 percent
Depth to restrictive feature: More than 80 inches
Natural drainage class: Well drained
Runoff class: Low
Capacity of the most limiting layer to transmit water (Ksat): Moderately high to high (0.60 to 2.00 in/hr)
Depth to water table: More than 80 inches
Frequency of flooding: Occasional
Frequency of ponding: None
Available water storage in profile: High (about 10.2 inches)

Interpretive groups

Land capability classification (irrigated): None specified
Land capability classification (nonirrigated): 2w
Hydrologic Soil Group: B
Ecological site: Loamy Terrace (R112XY123KS)
Forage suitability group: Unnamed (G112XY020OK)
Hydric soil rating: No

Minor Components

Moreland

Percent of map unit: 5 percent
Landform: Flood plains
Down-slope shape: Linear
Across-slope shape: Linear

Ecological site: Wet Floodplain (R112XY124KS)
Hydric soil rating: No

Mason

Percent of map unit: 5 percent
Landform: Flood plains
Down-slope shape: Linear
Across-slope shape: Linear
Ecological site: Loamy Terrace (R112XY123KS)
Hydric soil rating: No

Latanier

Percent of map unit: 5 percent
Landform: Plains on paleoterraces
Landform position (three-dimensional): Talf
Down-slope shape: Linear
Across-slope shape: Linear
Ecological site: Wet Floodplain (R112XY124KS)
Hydric soil rating: No

Kiomatia

Percent of map unit: 5 percent
Landform: Flood plains
Down-slope shape: Linear
Across-slope shape: Linear
Ecological site: Sandy Bottomland - Kiomatia (R118BY068OK)
Hydric soil rating: No

KfC—Kamie fine sandy loam, 1 to 5 percent slopes

Map Unit Setting

National map unit symbol: 3l32
Elevation: 500 to 1,500 feet
Mean annual precipitation: 37 to 51 inches
Mean annual air temperature: 57 to 64 degrees F
Frost-free period: 200 to 230 days
Farmland classification: All areas are prime farmland

Map Unit Composition

Kamie and similar soils: 94 percent
Minor components: 6 percent
Estimates are based on observations, descriptions, and transects of the mapunit.

Description of Kamie

Setting

Landform: Paleoterraces
Landform position (three-dimensional): Riser
Down-slope shape: Convex
Across-slope shape: Convex
Parent material: Loamy and sandy alluvium

Typical profile

Ap - 0 to 6 inches: fine sandy loam
E - 6 to 18 inches: fine sandy loam
Bt - 18 to 56 inches: sandy clay loam
BC - 56 to 70 inches: fine sandy loam

Properties and qualities

Slope: 1 to 5 percent
Depth to restrictive feature: More than 80 inches
Natural drainage class: Well drained
Runoff class: Low
Capacity of the most limiting layer to transmit water (Ksat): Moderately high to high (0.60 to 2.00 in/hr)
Depth to water table: More than 80 inches
Frequency of flooding: None
Frequency of ponding: None
Available water storage in profile: Moderate (about 9.0 inches)

Interpretive groups

Land capability classification (irrigated): None specified
Land capability classification (nonirrigated): 3e
Hydrologic Soil Group: B
Ecological site: Loamy Terrace - Formerly Sandy Savannah R118B075OK (R118BY004OK)
Forage suitability group: Unnamed (G112XY112OK)
Hydric soil rating: No

Minor Components

Okay

Percent of map unit: 6 percent
Landform: Paleoterraces
Landform position (three-dimensional): Riser
Down-slope shape: Convex
Across-slope shape: Linear
Ecological site: Loamy prairie (Northeast) PE 62-80 (R112XY059OK)
Hydric soil rating: No

M-W—Miscellaneous water

Map Unit Setting

National map unit symbol: rdld
Elevation: 250 to 4,000 feet
Mean annual precipitation: 39 to 48 inches
Mean annual air temperature: 58 to 60 degrees F
Frost-free period: 190 to 240 days
Farmland classification: Not prime farmland

Map Unit Composition

Water, miscellaneous: 100 percent

Estimates are based on observations, descriptions, and transects of the mapunit.

Description of Water, Miscellaneous

Typical profile

W - 0 to 80 inches: water

Interpretive groups

Land capability classification (irrigated): None specified
Land capability classification (nonirrigated): 8
Hydrologic Soil Group: D
Hydric soil rating: No

OaC—Okay loam, 3 to 5 percent slopes

Map Unit Setting

National map unit symbol: 3l3j
Elevation: 500 to 1,500 feet
Mean annual precipitation: 37 to 51 inches
Mean annual air temperature: 57 to 64 degrees F
Frost-free period: 190 to 230 days
Farmland classification: All areas are prime farmland

Map Unit Composition

Okay and similar soils: 75 percent
Minor components: 25 percent
Estimates are based on observations, descriptions, and transects of the mapunit.

Description of Okay

Setting

Landform: Paleoterraces
Landform position (three-dimensional): Riser
Down-slope shape: Convex
Across-slope shape: Linear
Parent material: Loamy alluvium

Typical profile

Ap - 0 to 13 inches: loam
Bt - 13 to 40 inches: clay loam
BC - 40 to 66 inches: fine sandy loam

Properties and qualities

Slope: 3 to 5 percent
Depth to restrictive feature: More than 80 inches
Natural drainage class: Well drained
Runoff class: Low
Capacity of the most limiting layer to transmit water (Ksat): Moderately high to high (0.60 to 2.00 in/hr)
Depth to water table: More than 80 inches
Frequency of flooding: None
Frequency of ponding: None
Available water storage in profile: High (about 9.2 inches)

Interpretive groups

Land capability classification (irrigated): None specified
Land capability classification (nonirrigated): 3e
Hydrologic Soil Group: B
Ecological site: Loamy prairie (Northeast) PE 62-80 (R112XY059OK)
Forage suitability group: Unnamed (G112XY017OK)
Hydric soil rating: No

Minor Components

Newtonia

Percent of map unit: 15 percent
Landform: Hillslopes on hills
Landform position (two-dimensional): Backslope
Down-slope shape: Convex
Across-slope shape: Convex
Ecological site: Loamy prairie (Northeast) PE 62-80 (R112XY059OK)
Hydric soil rating: No

Kamie

Percent of map unit: 7 percent
Landform: Paleoterraces
Landform position (three-dimensional): Riser
Down-slope shape: Convex
Across-slope shape: Convex
Ecological site: Loamy Terrace - Formerly Sandy Savannah R118B075OK (R118BY004OK)
Hydric soil rating: No

Choteau

Percent of map unit: 3 percent
Landform: Paleoterraces
Landform position (three-dimensional): Tread
Down-slope shape: Linear
Across-slope shape: Convex
Ecological site: Loamy prairie (Northeast) PE 62-80 (R112XY059OK)
Hydric soil rating: No

Rc—Radley silt loam, 0 to 1 percent slopes, frequently flooded

Map Unit Setting

National map unit symbol: 2w222
Elevation: 500 to 920 feet
Mean annual precipitation: 38 to 47 inches
Mean annual air temperature: 57 to 64 degrees F
Frost-free period: 190 to 220 days
Farmland classification: Not prime farmland

Map Unit Composition

Radley and similar soils: 80 percent

Minor components: 20 percent
Estimates are based on observations, descriptions, and transects of the mapunit.

Description of Radley

Setting

Landform: Flood-plain steps
Landform position (three-dimensional): Tread
Down-slope shape: Linear
Across-slope shape: Linear
Parent material: Silty alluvium

Typical profile

Ap - 0 to 16 inches: silt loam
Bw - 16 to 41 inches: silty clay loam
C - 41 to 79 inches: silty clay loam

Properties and qualities

Slope: 0 to 1 percent
Depth to restrictive feature: More than 80 inches
Natural drainage class: Moderately well drained
Capacity of the most limiting layer to transmit water (Ksat): Moderately high to high (0.20 to 1.98 in/hr)
Depth to water table: More than 80 inches
Frequency of flooding: Frequent
Frequency of ponding: None
Salinity, maximum in profile: Nonsaline to very slightly saline (0.0 to 2.0 mmhos/cm)
Available water storage in profile: High (about 12.0 inches)

Interpretive groups

Land capability classification (irrigated): None specified
Land capability classification (nonirrigated): 5w
Hydrologic Soil Group: B
Ecological site: Loamy bottomland PE 62-80 (R112XY050OK)
Hydric soil rating: No

Minor Components

Wynona

Percent of map unit: 10 percent
Landform: Flood plains
Landform position (three-dimensional): Tread
Down-slope shape: Linear
Across-slope shape: Linear
Ecological site: Loamy bottomland PE 62-80 (R112XY050OK)
Hydric soil rating: Yes

Cleora

Percent of map unit: 5 percent
Landform: Flood plains
Landform position (three-dimensional): Tread
Down-slope shape: Linear
Across-slope shape: Linear
Ecological site: Quercus macrocarpa-Quercus bicolor/Elymus virginicus-Cinna arundinacea (F112XY052MO)
Hydric soil rating: No

Choska

Percent of map unit: 5 percent
Landform: Stream terraces on flood plains
Landform position (three-dimensional): Tread
Down-slope shape: Linear
Across-slope shape: Convex
Ecological site: Loamy bottomland PE 62-80 (R112XY050OK)
Hydric soil rating: No

Tu—Tullahassee fine sandy loam, 0 to 1 percent slopes, frequently flooded

Map Unit Setting

National map unit symbol: 2w7l8
Elevation: 500 to 1,020 feet
Mean annual precipitation: 38 to 44 inches
Mean annual air temperature: 58 to 62 degrees F
Frost-free period: 190 to 225 days
Farmland classification: Not prime farmland

Map Unit Composition

Tullahassee and similar soils: 85 percent
Minor components: 15 percent
Estimates are based on observations, descriptions, and transects of the mapunit.

Description of Tullahassee

Setting

Landform: Flood plains
Landform position (three-dimensional): Tread
Down-slope shape: Linear
Across-slope shape: Linear
Parent material: Loamy alluvium

Typical profile

A - 0 to 16 inches: fine sandy loam
C1 - 16 to 56 inches: fine sandy loam
C2 - 56 to 79 inches: stratified fine sandy loam to loam

Properties and qualities

Slope: 0 to 1 percent
Depth to restrictive feature: More than 80 inches
Natural drainage class: Somewhat poorly drained
Capacity of the most limiting layer to transmit water (Ksat): Moderately high to high (0.57 to 5.95 in/hr)
Depth to water table: About 6 to 36 inches
Frequency of flooding: Frequent
Frequency of ponding: None
Salinity, maximum in profile: Nonsaline to very slightly saline (0.0 to 2.0 mmhos/cm)

Available water storage in profile: Moderate (about 8.3 inches)

Interpretive groups

Land capability classification (irrigated): None specified
Land capability classification (nonirrigated): 5w
Hydrologic Soil Group: A/D
Ecological site: Subirrigated PE 62-80 (R112XY095OK)
Hydric soil rating: Yes

Minor Components

Choska

Percent of map unit: 4 percent
Landform: Stream terraces
Landform position (three-dimensional): Tread
Down-slope shape: Linear
Across-slope shape: Convex
Ecological site: Loamy bottomland PE 62-80 (R112XY050OK)
Hydric soil rating: No

Cleora

Percent of map unit: 3 percent
Landform: Flood plains
Landform position (three-dimensional): Tread
Down-slope shape: Linear
Across-slope shape: Linear
Ecological site: Loamy bottomland PE 62-80 (R112XY050OK)
Hydric soil rating: No

Mason

Percent of map unit: 2 percent
Landform: Stream terraces
Landform position (three-dimensional): Tread
Down-slope shape: Linear
Across-slope shape: Linear
Ecological site: Loamy Lowland (Draft) (PE 35-42) (R112XY013KS)
Hydric soil rating: No

Madill

Percent of map unit: 2 percent
Landform: Flood-plain steps
Landform position (three-dimensional): Tread
Down-slope shape: Linear
Across-slope shape: Linear
Ecological site: Loamy bottomland PE 62-80 (R112XY050OK)
Hydric soil rating: No

Wynona

Percent of map unit: 2 percent
Landform: Flood-plain steps
Landform position (three-dimensional): Tread
Down-slope shape: Linear
Across-slope shape: Linear
Ecological site: Loamy bottomland PE 62-80 (R112XY050OK)
Hydric soil rating: Yes

Verdigris

Percent of map unit: 2 percent

Landform: Flood-plain steps
Landform position (three-dimensional): Tread
Down-slope shape: Linear
Across-slope shape: Linear
Ecological site: Loamy bottomland PE 62-80 (R112XY050OK)
Hydric soil rating: No

W—Water

Map Unit Setting

National map unit symbol: 3l3y
Elevation: 250 to 4,000 feet
Mean annual precipitation: 22 to 48 inches
Mean annual air temperature: 57 to 64 degrees F
Frost-free period: 190 to 240 days
Farmland classification: Not prime farmland

Map Unit Composition

Water: 100 percent
Estimates are based on observations, descriptions, and transects of the mapunit.

Description of Water

Typical profile

W - 0 to 80 inches: water

Interpretive groups

Land capability classification (irrigated): None specified
Land capability classification (nonirrigated): 8
Forage suitability group: Unnamed (G112XY999OK)
Hydric soil rating: No

References

American Association of State Highway and Transportation Officials (AASHTO). 2004. Standard specifications for transportation materials and methods of sampling and testing. 24th edition.

American Society for Testing and Materials (ASTM). 2005. Standard classification of soils for engineering purposes. ASTM Standard D2487-00.

Cowardin, L.M., V. Carter, F.C. Golet, and E.T. LaRoe. 1979. Classification of wetlands and deep-water habitats of the United States. U.S. Fish and Wildlife Service FWS/OBS-79/31.

Federal Register. July 13, 1994. Changes in hydric soils of the United States.

Federal Register. September 18, 2002. Hydric soils of the United States.

Hurt, G.W., and L.M. Vasilas, editors. Version 6.0, 2006. Field indicators of hydric soils in the United States.

National Research Council. 1995. Wetlands: Characteristics and boundaries.

Soil Survey Division Staff. 1993. Soil survey manual. Soil Conservation Service. U.S. Department of Agriculture Handbook 18. http://www.nrcs.usda.gov/wps/portal/nrcs/detail/national/soils/?cid=nrcs142p2_054262

Soil Survey Staff. 1999. Soil taxonomy: A basic system of soil classification for making and interpreting soil surveys. 2nd edition. Natural Resources Conservation Service, U.S. Department of Agriculture Handbook 436. http://www.nrcs.usda.gov/wps/portal/nrcs/detail/national/soils/?cid=nrcs142p2_053577

Soil Survey Staff. 2010. Keys to soil taxonomy. 11th edition. U.S. Department of Agriculture, Natural Resources Conservation Service. http://www.nrcs.usda.gov/wps/portal/nrcs/detail/national/soils/?cid=nrcs142p2_053580

Tiner, R.W., Jr. 1985. Wetlands of Delaware. U.S. Fish and Wildlife Service and Delaware Department of Natural Resources and Environmental Control, Wetlands Section.

United States Army Corps of Engineers, Environmental Laboratory. 1987. Corps of Engineers wetlands delineation manual. Waterways Experiment Station Technical Report Y-87-1.

United States Department of Agriculture, Natural Resources Conservation Service. National forestry manual. http://www.nrcs.usda.gov/wps/portal/nrcs/detail/soils/home/?cid=nrcs142p2_053374

United States Department of Agriculture, Natural Resources Conservation Service. National range and pasture handbook. http://www.nrcs.usda.gov/wps/portal/nrcs/detail/national/landuse/rangepasture/?cid=stelprdb1043084

United States Department of Agriculture, Natural Resources Conservation Service. National soil survey handbook, title 430-VI. http://www.nrcs.usda.gov/wps/portal/nrcs/detail/soils/scientists/?cid=nrcs142p2_054242

United States Department of Agriculture, Natural Resources Conservation Service. 2006. Land resource regions and major land resource areas of the United States, the Caribbean, and the Pacific Basin. U.S. Department of Agriculture Handbook 296. http://www.nrcs.usda.gov/wps/portal/nrcs/detail/national/soils/?cid=nrcs142p2_053624

United States Department of Agriculture, Soil Conservation Service. 1961. Land capability classification. U.S. Department of Agriculture Handbook 210. http://www.nrcs.usda.gov/Internet/FSE_DOCUMENTS/nrcs142p2_052290.pdf

Attachment 16.

Federal Emergency Management Agency (FEMA) Flood Insurance Rate Map (FIRM)

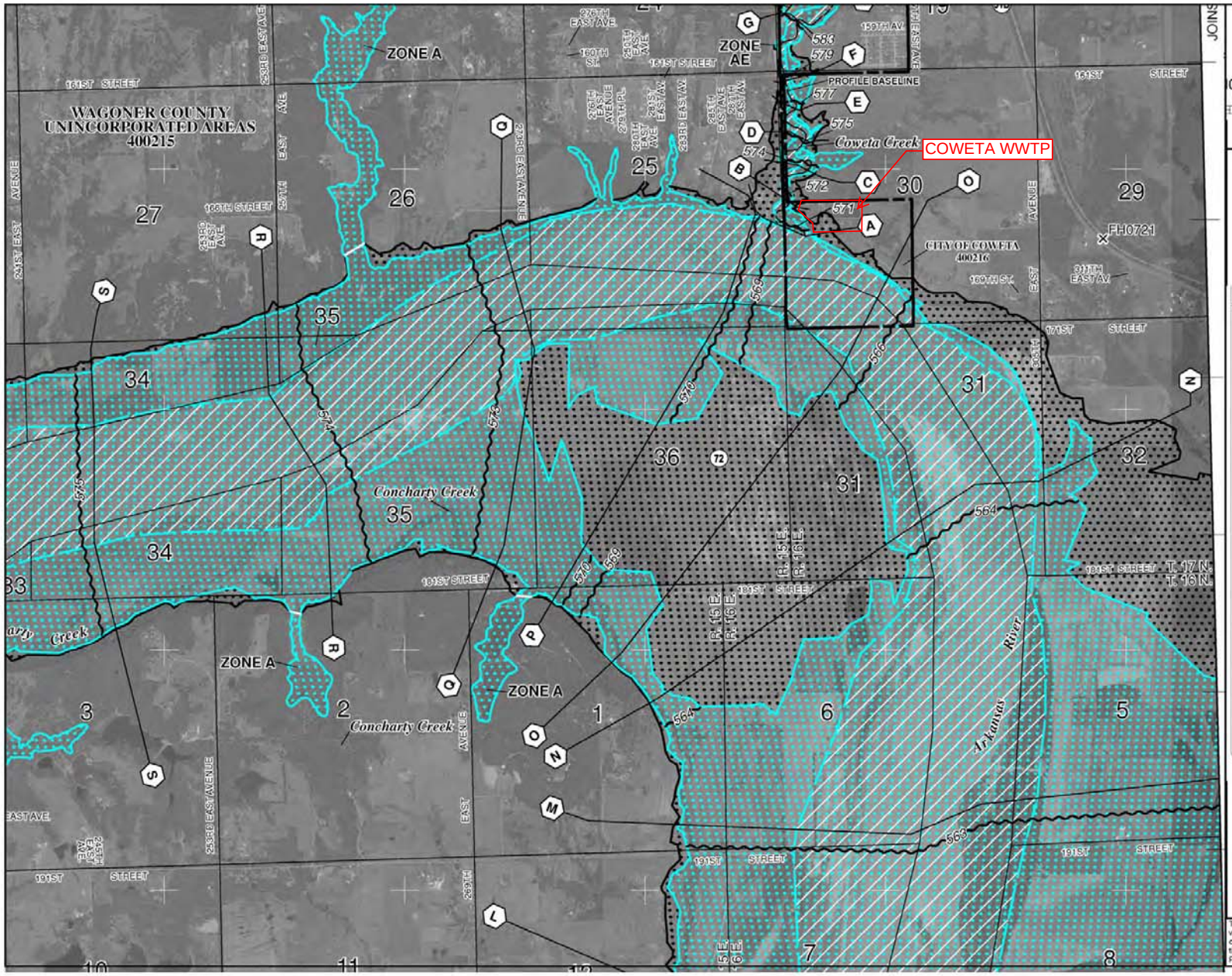

NFIP

PANEL 0275H

NATIONAL FLOOD INSURANCE PROGRAM

FIRM

FLOOD INSURANCE RATE MAP

WAGONER COUNTY, OKLAHOMA

AND INCORPORATED AREAS

PANEL 275 OF 525

(SEE MAP INDEX FOR FIRM PANEL LAYOUT)

CONTAINS:

COMMUNITY	NUMBER	PANEL	SUFFIX
WAGONER COUNTY	400215	0275	H
BROKEN ARROW, CITY OF	400236	0275	H
COWETA, CITY OF	400216	0275	H

Notice to User: The **Map Number** shown below should be used when placing map orders; the **Community Number** shown above should be used on insurance applications for the subject community.

MAP NUMBER
40145C0275H

EFFECTIVE DATE
APRIL 17, 2012

Federal Emergency Management Agency

This is an official copy of a portion of the above referenced flood map. It was extracted using F-MIT On-Line. This map does not reflect changes or amendments which may have been made subsequent to the date on the title block. For the latest product information about National Flood Insurance Program flood maps check the FEMA Flood Map Store at www.msc.fema.gov

Attachment 17.

Oklahoma Water Resources Board (OWRB) Water Management Division Correspondence

December 10, 2018

Water Management Division
Oklahoma Water Resources Board
3800 N. Classen Blvd.
Oklahoma City, OK 73118

To Whom It May Concern:

Re: Wastewater Treatment Plant Project to Serve the City of Coweta

The Coweta Public Works Authority (CPWA) owns a publicly owned wastewater treatment works (POTW) that serves the residents of the City of Coweta. The POTW consists of a wastewater collection system, and wastewater treatment plant (WWTP) utilizing flow-through lagoons equipped with mechanical aeration followed by a polishing pond, and disinfection basin.

The CPWA is projected to grow at a pace exceeding the state average for the next 20 years. The CPWA is expanding their wastewater treatment plant to meet the projected growth. The project will be funded through a loan from the Oklahoma Water Resources Board (OWRB) - Clean Water State Revolving Fund (CWSRF) in the amount of $11,308,168. Compliance with the National Environmental Protection Act of 1969 (NEPA) and the Environmental Review procedures for CWSRF projects is required on this project.

The proposed project consists of modifying and upgrading the existing WWTP to accommodate an average daily flow up to 1.5 MGD. The proposed project includes: a new influent lift station; lagoon system improvements; aeration basin improvements; two (2) new aerobic sludge digesters; a new flow equalization basin; two (2) new secondary clarifiers, an activated sludge pump station; sludge drying beds improvements; and disinfection basin modifications.

The project location is the N½, SW1/4, Section 30, Township 17 North, Range 16 East, Indian Meridian, Wagoner County, Oklahoma. All construction will be on the existing plant site which is mowed and maintained by CPWA staff. **Location map is included.**

On-site inspections will be carried out while construction is in progress. No individuals will be displaced because of this project. To complete the environmental review, we would appreciate a written response on the proposed project from your agency. **Please comment on any agency areas of concern.** We do not anticipate that the proposed project will have a significant impact on the environment and appreciate your assistance and response.

Sincerely,

David Wyatt, P.E.
WDB Engineering, PLLC.

JULIE CUNNINGHAM
EXECUTIVE DIRECTOR

MARY FALLIN
GOVERNOR

STATE OF OKLAHOMA
WATER RESOURCES BOARD
www.owrb.ok.gov

OKLAHOMA WATER RESOURCES BOARD
Planning & Management Division
Oklahoma City, OK

PUBLIC NOTICE REVIEW

___ We have no comments to offer. _X_ We offer the following comments.

WE RECOMMEND THAT YOU CONTACT THE LOCAL FLOODPLAIN ADMINISTRATOR FOR POSSIBLE PERMIT REQUIREMENTS FOR THIS PROJECT. THE OWRB WEB SITE, www.owrb.ok.gov, contains a directory of floodplain administrators and is located under forms/floodplain management/floodplain administrators, listed alphabetically by name of community. If this development would fall on state owned or operated property, a floodplain development permit is required from OWRB. The Chapter 55 Rules and permit application for this requirement can be found on the OWRB web site listed above. If this project is proposed in a non-participating community, try to ensure that this project is completed so that it is reasonably safe from flooding and so that it does not flood adjacent property if at all possible.

Reviewer: _Cathy L. Poage, CFM_____ DATE __1/11/2019

Project Name: Proposed Watstewater Treatment Plant Project for Coweta, Located in the N ½ SW ¼ of Section 30, T17N, R16EIM, in Wagoner County, OK

FIRM Name: WDB Engineering PLLC, David Wyatt, P.E.
CC: Rachael Cooper, CFM, FPA Wagoner County

* Wagoner County participates in the NFIP and has a floodplain development permitting system. See paragraph above.

THE OKLAHOMAN

3800 N. CLASSEN BOULEVARD • OKLAHOMA CITY, OKLAHOMA 73118
TELEPHONE (405) 530-8800 • FAX (405) 530-8900

Stephen B. Allen • Jennifer Castillo • Charles Darby • Bob Drake
F. Ford Drummond • Jason W. Hitch • Robert L. Melton • Matt Muller • Robert Stallings

Attachment 18.

FEMA Region 6 Mitigation Division Correspondence

December 10, 2018

U.S. Department of Homeland Security
FEMA Region IV
Fed'l Insurance & Mitigation Admin.
800 North Loop 288
Denton, TX 76209-3698

To Whom It May Concern:

Re: Wastewater Treatment Plant Project to Serve the City of Coweta

The Coweta Public Works Authority (CPWA) owns a publicly owned wastewater treatment works (POTW) that serves the residents of the City of Coweta. The POTW consists of a wastewater collection system, and wastewater treatment plant (WWTP) utilizing flow-through lagoons equipped with mechanical aeration followed by a polishing pond, and disinfection basin.

The CPWA is projected to grow at a pace exceeding the state average for the next 20 years. The CPWA is expanding their wastewater treatment plant to meet the projected growth. The project will be funded through a loan from the Oklahoma Water Resources Board (OWRB) - Clean Water State Revolving Fund (CWSRF) in the amount of $11,308,168. Compliance with the National Environmental Protection Act of 1969 (NEPA) and the Environmental Review procedures for CWSRF projects is required on this project.

The proposed project consists of modifying and upgrading the existing WWTP to accommodate an average daily flow up to 1.5 MGD. The proposed project includes: a new influent lift station; lagoon system improvements; aeration basin improvements; two (2) new aerobic sludge digesters; a new flow equalization basin; two (2) new secondary clarifiers, an activated sludge pump station; sludge drying beds improvements; and disinfection basin modifications.

The project location is the N½, SW1/4, Section 30, Township 17 North, Range 16 East, Indian Meridian, Wagoner County, Oklahoma. All construction will be on the existing plant site which is mowed and maintained by CPWA staff. **Location map is included.**

On-site inspections will be carried out while construction is in progress. No individuals will be displaced because of this project. To complete the environmental review, we would appreciate a written response on the proposed project from your agency. **Please comment on any agency areas of concern.** We do not anticipate that the proposed project will have a significant impact on the environment and appreciate your assistance and response.

Sincerely,

David Wyatt, P.E.
WDB Engineering, PLLC.

U. S. Department of Homeland Security
FEMA Region 6
800 North Loop 288
Denton, TX 76209-3698

FEMA

FEDERAL EMERGENCY MANAGEMENT AGENCY
REGION 6
MITIGATION DIVISION

RE: Wastewater Treatment Plant Project to Serve the City of Coweta

NOTICE REVIEW/ENVIRONMENTAL CONSULTATION

☐ We have no comments to offer. ☒ We offer the following comments:

WE WOULD REQUEST THAT THE COMMUNITY FLOODPLAIN ADMINISTRATOR BE CONTACTED FOR THE REVIEW AND POSSIBLE PERMIT REQUIREMENTS FOR THIS PROJECT. IF FEDERALLY FUNDED, WE WOULD REQUEST PROJECT TO BE IN COMPLIANCE WITH EO11988 & EO 11990.

William "Chip" Cohrs III, PE, PLS
City Engineer
PO. Box 850
Coweta, OK 74429
wmcohrs@cityofcoweta-ok.gov
(918) 486-2189

REVIEWER:

Colleen Sciano
Floodplain Management and Insurance Branch
Mitigation Division
(940) 383-7257

DATE: January 10, 2019

Attachment 19.

Wagoner County Floodplain Administrator Correspondence

December 10, 2018

Floodplain Administrator
Wagoner County Courthouse
307 E. Cherokee, 3rd Floor
Wagoner, OK 74467

To Whom It May Concern:

Re: Wastewater Treatment Plant Project to Serve the City of Coweta

The Coweta Public Works Authority (CPWA) owns a publicly owned wastewater treatment works (POTW) that serves the residents of the City of Coweta. The POTW consists of a wastewater collection system, and wastewater treatment plant (WWTP) utilizing flow-through lagoons equipped with mechanical aeration followed by a polishing pond, and disinfection basin.

The CPWA is projected to grow at a pace exceeding the state average for the next 20 years. The CPWA is expanding their wastewater treatment plant to meet the projected growth. The project will be funded through a loan from the Oklahoma Water Resources Board (OWRB) - Clean Water State Revolving Fund (CWSRF) in the amount of $11,308,168. Compliance with the National Environmental Protection Act of 1969 (NEPA) and the Environmental Review procedures for CWSRF projects is required on this project.

The proposed project consists of modifying and upgrading the existing WWTP to accommodate an average daily flow up to 1.5 MGD. The proposed project includes: a new influent lift station; lagoon system improvements; aeration basin improvements; two (2) new aerobic sludge digesters; a new flow equalization basin; two (2) new secondary clarifiers, an activated sludge pump station; sludge drying beds improvements; and disinfection basin modifications.

The project location is the N½, SW1/4, Section 30, Township 17 North, Range 16 East, Indian Meridian, Wagoner County, Oklahoma. All construction will be on the existing plant site which is mowed and maintained by CPWA staff. **Location map is included.**

On-site inspections will be carried out while construction is in progress. No individuals will be displaced because of this project. To complete the environmental review, we would appreciate a written response on the proposed project from your agency. **Please comment on any agency areas of concern.** We do not anticipate that the proposed project will have a significant impact on the environment and appreciate your assistance and response.

Sincerely,

David Wyatt, P.E.
WDB Engineering, PLLC.

Attachment 20.

City of Coweta Floodplain Administrator Correspondence

December 10, 2018

Floodplain Administrator
City of Coweta
310 S. Broadway
Coweta, OK 74429

To Whom It May Concern:

Re: Wastewater Treatment Plant Project to Serve the City of Coweta

The Coweta Public Works Authority (CPWA) owns a publicly owned wastewater treatment works (POTW) that serves the residents of the City of Coweta. The POTW consists of a wastewater collection system, and wastewater treatment plant (WWTP) utilizing flow-through lagoons equipped with mechanical aeration followed by a polishing pond, and disinfection basin.

The CPWA is projected to grow at a pace exceeding the state average for the next 20 years. The CPWA is expanding their wastewater treatment plant to meet the projected growth. The project will be funded through a loan from the Oklahoma Water Resources Board (OWRB) - Clean Water State Revolving Fund (CWSRF) in the amount of $11,308,168. Compliance with the National Environmental Protection Act of 1969 (NEPA) and the Environmental Review procedures for CWSRF projects is required on this project.

The proposed project consists of modifying and upgrading the existing WWTP to accommodate an average daily flow up to 1.5 MGD. The proposed project includes: a new influent lift station; lagoon system improvements; aeration basin improvements; two (2) new aerobic sludge digesters; a new flow equalization basin; two (2) new secondary clarifiers, an activated sludge pump station; sludge drying beds improvements; and disinfection basin modifications.

The project location is the N½, SW1/4, Section 30, Township 17 North, Range 16 East, Indian Meridian, Wagoner County, Oklahoma. All construction will be on the existing plant site which is mowed and maintained by CPWA staff. **Location map is included.**

On-site inspections will be carried out while construction is in progress. No individuals will be displaced because of this project. To complete the environmental review, we would appreciate a written response on the proposed project from your agency. **Please comment on any agency areas of concern.** We do not anticipate that the proposed project will have a significant impact on the environment and appreciate your assistance and response.

Sincerely,

David Wyatt, P.E.
WDB Engineering, PLLC.

CITY OF
Coweta

POST OFFICE BOX 850 • COWETA, OKLAHOMA 74429 • PH. (918) 486-2189 • FAX (918) 486-5366 • www.cityofcoweta-ok.gov

February 27, 2019

RE: Environmental Information Document

WDB Engineering P.L.L.C.
6330 SE. 7th Street
Oklahoma City, OK 73135

To Whom it May Concern:

I have reviewed the project and documents provided and do not see any adverse impact to the flood plain in the City of Coweta.

Sincerely,

Wm. H. Cohrs, III, P.E.
Flood Plain Administrator
City of Coweta, OK.

Attachment 21.

US Army Corps of Engineers (USACE) Water Management Branch Correspondence

December 10, 2018

Water Management Branch
U.S. ARMY CORPS OF ENGINEERS
ATTN: CESWT-PE-P
2488 East 81st Street
Tulsa, OK 74127

To Whom It May Concern:

Re: Wastewater Treatment Plant Project to Serve the City of Coweta

The Coweta Public Works Authority (CPWA) owns a publicly owned wastewater treatment works (POTW) that serves the residents of the City of Coweta. The POTW consists of a wastewater collection system, and wastewater treatment plant (WWTP) utilizing flow-through lagoons equipped with mechanical aeration followed by a polishing pond, and disinfection basin.

The CPWA is projected to grow at a pace exceeding the state average for the next 20 years. The CPWA is expanding their wastewater treatment plant to meet the projected growth. The project will be funded through a loan from the Oklahoma Water Resources Board (OWRB) - Clean Water State Revolving Fund (CWSRF) in the amount of $11,308,168. Compliance with the National Environmental Protection Act of 1969 (NEPA) and the Environmental Review procedures for CWSRF projects is required on this project.

The proposed project consists of modifying and upgrading the existing WWTP to accommodate an average daily flow up to 1.5 MGD. The proposed project includes: a new influent lift station; lagoon system improvements; aeration basin improvements; two (2) new aerobic sludge digesters; a new flow equalization basin; two (2) new secondary clarifiers, an activated sludge pump station; sludge drying beds improvements; and disinfection basin modifications.

The project location is the N½, SW1/4, Section 30, Township 17 North, Range 16 East, Indian Meridian, Wagoner County, Oklahoma. All construction will be on the existing plant site which is mowed and maintained by CPWA staff. **Location map is included.**

On-site inspections will be carried out while construction is in progress. No individuals will be displaced because of this project. To complete the environmental review, we would appreciate a written response on the proposed project from your agency. **Please comment on any agency areas of concern.** We do not anticipate that the proposed project will have a significant impact on the environment and appreciate your assistance and response.

Sincerely,

David Wyatt, P.E.
WDB Engineering, PLLC.

Attachment 22.

USACE Regulatory Branch Correspondence

December 10, 2018

Regulatory Branch
DEPARTMENT OF THE ARMY
U.S. ARMY CORPS OF ENGINEERS
ATTN: CESWT-PE-R
2488 East 81st Street
Tulsa, OK 74127

To Whom It May Concern:

Re: Wastewater Treatment Plant Project to Serve the City of Coweta

The Coweta Public Works Authority (CPWA) owns a publicly owned wastewater treatment works (POTW) that serves the residents of the City of Coweta. The POTW consists of a wastewater collection system, and wastewater treatment plant (WWTP) utilizing flow-through lagoons equipped with mechanical aeration followed by a polishing pond, and disinfection basin.

The CPWA is projected to grow at a pace exceeding the state average for the next 20 years. The CPWA is expanding their wastewater treatment plant to meet the projected growth. The project will be funded through a loan from the Oklahoma Water Resources Board (OWRB) - Clean Water State Revolving Fund (CWSRF) in the amount of $11,308,168. Compliance with the National Environmental Protection Act of 1969 (NEPA) and the Environmental Review procedures for CWSRF projects is required on this project.

The proposed project consists of modifying and upgrading the existing WWTP to accommodate an average daily flow up to 1.5 MGD. The proposed project includes: a new influent lift station; lagoon system improvements; aeration basin improvements; two (2) new aerobic sludge digesters; a new flow equalization basin; two (2) new secondary clarifiers, an activated sludge pump station; sludge drying beds improvements; and disinfection basin modifications.

The project location is the N½, SW1/4, Section 30, Township 17 North, Range 16 East, Indian Meridian, Wagoner County, Oklahoma. All construction will be on the existing plant site which is mowed and maintained by CPWA staff. **Location map is included.**

On-site inspections will be carried out while construction is in progress. No individuals will be displaced because of this project. To complete the environmental review, we would appreciate a written response on the proposed project from your agency. **Please comment on any agency areas of concern.** We do not anticipate that the proposed project will have a significant impact on the environment and appreciate your assistance and response.

Sincerely,

David Wyatt, P.E.
WDB Engineering, PLLC.

DEPARTMENT OF THE ARMY
CORPS OF ENGINEERS, TULSA DISTRICT
2488 EAST 81ST STREET
TULSA, OKLAHOMA 74137-4290

January 11, 2019

Regulatory Office

Mr. David Wyatt, P.E.
WDB Engineering P.L.L.C.
6330 SE 74th Street
Oklahoma City, OK 73135

Dear Mr. Wyatt:

Please reference your correspondence dated December 10, 2018, concerning the expansion of a wastewater treatment facility. The proposed project is located in Section 30, Township 17 North, Range 16 East, near Coweta, Wagoner County, Oklahoma. We have reviewed the submitted data relative to Section 404 of the Clean Water Act (CWA).

The provided information does not indicate that a placement of dredged or fill material will be required, permanently or temporarily, into any potential "waters of the United States," including potential jurisdictional wetlands. Therefore, your proposal is not subject to regulation pursuant to Section 404 of the CWA, and a Department of the Army (DA) permit will not be required. Should your method of construction necessitate such a discharge into an aquatic area or tributary stream, we suggest that you resubmit that portion of your project so that we may determine whether an individual DA permit will be required.

This No Permit Required determination does not address nor include any consideration for geographic jurisdiction on aquatic resources and shall not be interpreted as such.

Although Section 404 of the CWA authorization is not required, this does not preclude the possibility that a real estate interest or other Federal, State, or local permits may be required. If you desire to complete a "Customer Service Survey" on your experience with the Corps Regulatory Program, you are invited to visit http://corpsmapu.usace.army.mil/cm_apex/f?p=regulatory_survey on the internet at your convenience and submit your comments.

Your project has been assigned Identification Number SWT-2019-00033. Please refer to this number during future correspondence. If further assistance is required, contact Mr. Brett Adams at (918) 669-7534.

Sincerely,

For: Andrew R. Commer
Chief, Regulatory Office

Attachment 23.

Oklahoma Historical Society (OHS) Correspondence

December 10, 2018

Oklahoma Historical Society
State Historic Preservation Office
800 Nazih Zuhdi Dr.
Oklahoma City, OK 73105-7917

To Whom It May Concern:

Re: Wastewater Treatment Plant Project to Serve the City of Coweta

The Coweta Public Works Authority (CPWA) owns a publicly owned wastewater treatment works (POTW) that serves the residents of the City of Coweta. The POTW consists of a wastewater collection system, and wastewater treatment plant (WWTP) utilizing flow-through lagoons equipped with mechanical aeration followed by a polishing pond, and disinfection basin.

The CPWA is projected to grow at a pace exceeding the state average for the next 20 years. The CPWA is expanding their wastewater treatment plant to meet the projected growth. The project will be funded through a loan from the Oklahoma Water Resources Board (OWRB) - Clean Water State Revolving Fund (CWSRF) in the amount of $11,308,168. Compliance with the National Environmental Protection Act of 1969 (NEPA) and the Environmental Review procedures for CWSRF projects is required on this project.

The proposed project consists of modifying and upgrading the existing WWTP to accommodate an average daily flow up to 1.5 MGD. The proposed project includes: a new influent lift station; lagoon system improvements; aeration basin improvements; two (2) new aerobic sludge digesters; a new flow equalization basin; two (2) new secondary clarifiers, an activated sludge pump station; sludge drying beds improvements; and disinfection basin modifications.

The project location is the N½, SW1/4, Section 30, Township 17 North, Range 16 East, Indian Meridian, Wagoner County, Oklahoma. All construction will be on the existing plant site which is mowed and maintained by CPWA staff. **Location map is included.**

On-site inspections will be carried out while construction is in progress. No individuals will be displaced because of this project. To complete the environmental review, we would appreciate a written response on the proposed project from your agency. **Please comment on any agency areas of concern.** We do not anticipate that the proposed project will have a significant impact on the environment and appreciate your assistance and response.

Sincerely,

David Wyatt, P.E.
WDB Engineering, PLLC.

ORF-19-0008-CW

Oklahoma Historical Society *Founded May 27, 1893*
State Historic Preservation Office
Oklahoma History Center • 800 Nazih Zuhdi Drive • Oklahoma City, OK 73105-7917
(405) 521-6249 • Fax (405) 522-0816 • www.okhistory.org/shpo/shpom.htm

January 4, 2019

RECEIVED
JAN 08 2019
Oklahoma Water Resources Board

Ms. Lindy Clay
Oklahoma Water Resources Board
3800 N. Classen Boulevard *(INTERAGENCY)*
Oklahoma City, OK 73118

RE: File #0546-19; Coweta Proposed Wastewater Treatment Plant Expansion Project

Dear Ms. Clay:

We have received and reviewed the documentation concerning the referenced project in Wagoner County. Additionally, we have examined the information contained in the Oklahoma Landmarks Inventory (OLI) files and other materials on historic resources available in our office. We find that there are no historic properties affected by the referenced project.

Thank you for the opportunity to comment on this project. We look forward to working with you in the future.

If you have any questions, please contact Catharine M. Wood, Historical Archaeologist, at 405/521-6381.

Should further correspondence pertaining to this project be necessary, please reference the above underlined file number. Thank you.

Sincerely,

Lynda Ozan
Deputy State Historic
Preservation Officer

LO:jr

Attachment 24.

Oklahoma Archeological Survey (OAS) Correspondence

December 10, 2018

State Archeologist
University of Oklahoma
Oklahoma Archeological Survey
111 E. Chesapeake
Norman, OK 73019-5111

To Whom It May Concern:

Re: Wastewater Treatment Plant Project to Serve the City of Coweta

The Coweta Public Works Authority (CPWA) owns a publicly owned wastewater treatment works (POTW) that serves the residents of the City of Coweta. The POTW consists of a wastewater collection system, and wastewater treatment plant (WWTP) utilizing flow-through lagoons equipped with mechanical aeration followed by a polishing pond, and disinfection basin.

The CPWA is projected to grow at a pace exceeding the state average for the next 20 years. The CPWA is expanding their wastewater treatment plant to meet the projected growth. The project will be funded through a loan from the Oklahoma Water Resources Board (OWRB) - Clean Water State Revolving Fund (CWSRF) in the amount of $11,308,168. Compliance with the National Environmental Protection Act of 1969 (NEPA) and the Environmental Review procedures for CWSRF projects is required on this project.

The proposed project consists of modifying and upgrading the existing WWTP to accommodate an average daily flow up to 1.5 MGD. The proposed project includes: a new influent lift station; lagoon system improvements; aeration basin improvements; two (2) new aerobic sludge digesters; a new flow equalization basin; two (2) new secondary clarifiers, an activated sludge pump station; sludge drying beds improvements; and disinfection basin modifications.

The project location is the N½, SW1/4, Section 30, Township 17 North, Range 16 East, Indian Meridian, Wagoner County, Oklahoma. All construction will be on the existing plant site which is mowed and maintained by CPWA staff. **Location map is included.**

On-site inspections will be carried out while construction is in progress. No individuals will be displaced because of this project. To complete the environmental review, we would appreciate a written response on the proposed project from your agency. **Please comment on any agency areas of concern.** We do not anticipate that the proposed project will have a significant impact on the environment and appreciate your assistance and response.

Sincerely,

David Wyatt, P.E.
WDB Engineering, PLLC.

Oklahoma Archeological Survey

THE UNIVERSITY OF OKLAHOMA

December 13, 2018

David Wyatt, P.E.
WDB Engineering PLLC
6330 SE 74th Street
Oklahoma City, Oklahoma 73135

Re: City of Coweta and CPWA Proposes Modification and Upgrade of an Existing Wastewater Treatment Plant.
Legal Description: NE ¼ NW ¼ and NW ¼ NE ¼ SW ¼ of Section 30, T17N, R16E, Wagoner County, Oklahoma.

Dear Mr. Wyatt:

The Community Assistance Program staff of the Oklahoma Archeological Survey has reviewed the above referenced project in order to identify areas that may potentially contain prehistoric or historic archeological materials (historic properties). The location of your project has been crosschecked with the state site files containing approximately 26,500 archaeological sites, which are currently recorded for the state of Oklahoma. No Sites are listed as occurring within your project area, and based on the topographic and hydrologic setting, no archaeological materials are likely to be encountered. Thus, an archaeological field inspection is not considered necessary. Should Construction expose buried archaeological materials such as chipped stone tools, pottery, bone, historic crockery, glass, metal items or building materials, please contact this office at (405) 325-7211.

This environmental review and evaluation is done in cooperation with the State Historic Preservation Office, Oklahoma Historical Society. The responsible federal agency or their official delegate must also have a letter from that office to document consultation pursuant to Section 106 of the National Historic Preservation Act.

In addition to our review comments, under 36CFR Part 800.3 you are reminded of your responsibility to consult with the appropriate Native American tribe/groups to identify any concerns they may have pertaining to this undertaking and potential impacts to properties of traditional and/or ceremonial value.

Sincerely,

Harmony C. Cole
Staff Archaeologist

Kary L. Stackelbeck, Ph.D.
State Archaeologist

: hjw
cc: SHPO

111 E. Chesapeake, Room 102, Norman, Oklahoma 73019-5111 PHONE: (405) 325-7211 FAX: (405) 325-7604
A UNIT OF ARTS AND SCIENCES SERVING THE PEOPLE OF OKLAHOMA

Attachment 25.

Bureau of Indian Affairs (BIA) Correspondence

December 10, 2018

Bureau of Indian Affairs
Eastern Okla. Regional Office
PO Box 8002
Muskogee, OK 74402-8002

To Whom It May Concern:

Re: Wastewater Treatment Plant Project to Serve the City of Coweta

The Coweta Public Works Authority (CPWA) owns a publicly owned wastewater treatment works (POTW) that serves the residents of the City of Coweta. The POTW consists of a wastewater collection system, and wastewater treatment plant (WWTP) utilizing flow-through lagoons equipped with mechanical aeration followed by a polishing pond, and disinfection basin.

The CPWA is projected to grow at a pace exceeding the state average for the next 20 years. The CPWA is expanding their wastewater treatment plant to meet the projected growth. The project will be funded through a loan from the Oklahoma Water Resources Board (OWRB) - Clean Water State Revolving Fund (CWSRF) in the amount of $11,308,168. Compliance with the National Environmental Protection Act of 1969 (NEPA) and the Environmental Review procedures for CWSRF projects is required on this project.

The proposed project consists of modifying and upgrading the existing WWTP to accommodate an average daily flow up to 1.5 MGD. The proposed project includes: a new influent lift station; lagoon system improvements; aeration basin improvements; two (2) new aerobic sludge digesters; a new flow equalization basin; two (2) new secondary clarifiers, an activated sludge pump station; sludge drying beds improvements; and disinfection basin modifications.

The project location is the N½, SW1/4, Section 30, Township 17 North, Range 16 East, Indian Meridian, Wagoner County, Oklahoma. All construction will be on the existing plant site which is mowed and maintained by CPWA staff. **Location map is included.**

On-site inspections will be carried out while construction is in progress. No individuals will be displaced because of this project. To complete the environmental review, we would appreciate a written response on the proposed project from your agency. **Please comment on any agency areas of concern.** We do not anticipate that the proposed project will have a significant impact on the environment and appreciate your assistance and response.

Sincerely,

David Wyatt, P.E.
WDB Engineering, PLLC.

United States Department of the Interior
BUREAU OF INDIAN AFFAIRS
Eastern Oklahoma Region
Eastern Oklahoma Regional Office
P.O. Box 8002
Muskogee, OK 74402-8002

IN REPLY REFER TO:

Division of Environmental and
Cultural Resources Management

DEC 14 2018

David Wyatt, P.E.
WDB Engineering, P.L.L.C.
6330 S.E. 74th St.
Oklahoma City, OK 73135

Dear Mr. Wyatt:

On December 13, 2018, the Bureau of Indian Affairs, Eastern Oklahoma Regional Office, received solicitation for information or comments from WDB Engineering, P.L.L.C., regarding expansion of the Coweta Public Works Authority (CPWA) wastewater treatment plant in Wagoner County, Oklahoma. This office has no comments regarding the project at this time.

Five Federally recognized Tribes has been provided the notice by copy of this letter. As the Tribes may have environmental and/or cultural resources concerns relating to this action, it is recommended that WDB Engineering, P.L.L.C. coordinate directly with the Tribes on any of their concerns. The contact addresses are enclosed.

If additional information is required, please contact Mr. Mosby Halterman, Acting Division Chief, Division of Environmental and Cultural Resources Management, at (918) 781-4660.

Respectfully,

Regional Director

Enclosure

Dr. Andrea Hunter
THPO, Osage Nation
627 Grandview Avenue
Pawhuska, OK 74056
Phone: (918) 287-5432
Fax: (918) 287-2257

Raelynn Butler
THPO, Muscogee (Creek) Nation
P.O. Box 580
Okmulgee, OK 74447
Phone: (918) 732-7600
Fax: (918) 756-2911

Nelson Scott Harjo, Chief
Alabama-Quassarte Tribal Town
P.O. Box 187
Wetumka, OK 74883
Phone: (405) 452-3987
Fax: (405) 452-3968

Jeremiah Hobia, Town King
Kialegee Tribal Town
P.O. Box 332
Wetumka, OK 74883
Phone: (405) 452-3262
Fax: (405) 452-3413

Ryan Morrow, Interim Town King
Thlopthlocco Tribal Town
P.O. Box 188
Okemah, Ok 74859
Phone: (918) 560-6198
Fax: (918) 560-6196

Attachment 26.

Muskogee (Creek) Nation Environmental Services Correspondence

December 10, 2018

Muskogeee (Creek) Nation Environ. Services
Housing Building
2591 N. Wood Drive
PO Box 580
Okmulgee, OK 74447

To Whom It May Concern:

Re: Wastewater Treatment Plant Project to Serve the City of Coweta

The Coweta Public Works Authority (CPWA) owns a publicly owned wastewater treatment works (POTW) that serves the residents of the City of Coweta. The POTW consists of a wastewater collection system, and wastewater treatment plant (WWTP) utilizing flow-through lagoons equipped with mechanical aeration followed by a polishing pond, and disinfection basin.

The CPWA is projected to grow at a pace exceeding the state average for the next 20 years. The CPWA is expanding their wastewater treatment plant to meet the projected growth. The project will be funded through a loan from the Oklahoma Water Resources Board (OWRB) - Clean Water State Revolving Fund (CWSRF) in the amount of $11,308,168. Compliance with the National Environmental Protection Act of 1969 (NEPA) and the Environmental Review procedures for CWSRF projects is required on this project.

The proposed project consists of modifying and upgrading the existing WWTP to accommodate an average daily flow up to 1.5 MGD. The proposed project includes: a new influent lift station; lagoon system improvements; aeration basin improvements; two (2) new aerobic sludge digesters; a new flow equalization basin; two (2) new secondary clarifiers, an activated sludge pump station; sludge drying beds improvements; and disinfection basin modifications.

The project location is the N½, SW1/4, Section 30, Township 17 North, Range 16 East, Indian Meridian, Wagoner County, Oklahoma. All construction will be on the existing plant site which is mowed and maintained by CPWA staff. **Location map is included.**

On-site inspections will be carried out while construction is in progress. No individuals will be displaced because of this project. To complete the environmental review, we would appreciate a written response on the proposed project from your agency. **Please comment on any agency areas of concern.** We do not anticipate that the proposed project will have a significant impact on the environment and appreciate your assistance and response.

Sincerely,

David Wyatt, P.E.
WDB Engineering, PLLC.

Attachment 27.

Oklahoma Department of Environmental Quality (ODEQ) External Affairs Correspondence

December 10, 2018

Mr. John Roberts
Okla. Dept. of Environmental Quality
External Affairs
PO Box 1677
Oklahoma City, OK 73101-1677

Dear Mr. Roberts:

Re: Wastewater Treatment Plant Project to Serve the City of Coweta

The Coweta Public Works Authority (CPWA) owns a publicly owned wastewater treatment works (POTW) that serves the residents of the City of Coweta. The POTW consists of a wastewater collection system, and wastewater treatment plant (WWTP) utilizing flow-through lagoons equipped with mechanical aeration followed by a polishing pond, and disinfection basin.

The CPWA is projected to grow at a pace exceeding the state average for the next 20 years. The CPWA is expanding their wastewater treatment plant to meet the projected growth. The project will be funded through a loan from the Oklahoma Water Resources Board (OWRB) - Clean Water State Revolving Fund (CWSRF) in the amount of $11,308,168. Compliance with the National Environmental Protection Act of 1969 (NEPA) and the Environmental Review procedures for CWSRF projects is required on this project.

The proposed project consists of modifying and upgrading the existing WWTP to accommodate an average daily flow up to 1.5 MGD. The proposed project includes: a new influent lift station; lagoon system improvements; aeration basin improvements; two (2) new aerobic sludge digesters; a new flow equalization basin; two (2) new secondary clarifiers, an activated sludge pump station; sludge drying beds improvements; and disinfection basin modifications.

The project location is the N½, SW1/4, Section 30, Township 17 North, Range 16 East, Indian Meridian, Wagoner County, Oklahoma. All construction will be on the existing plant site which is mowed and maintained by CPWA staff. **Location map is included.**

On-site inspections will be carried out while construction is in progress. No individuals will be displaced because of this project. To complete the environmental review, we would appreciate a written response on the proposed project from your agency. **Please comment on any agency areas of concern.** We do not anticipate that the proposed project will have a significant impact on the environment and appreciate your assistance and response.

Sincerely,

David Wyatt, P.E.
WDB Engineering, PLLC.

SCOTT A. THOMPSON
Executive Director

OKLAHOMA DEPARTMENT OF ENVIRONMENTAL QUALITY

MARY FALLIN
Governor

December 18, 2018

David Wyatt, P.E.
WDB Engineering, PLLC
6330 S.E. 74th Street
Oklahoma City, OK 73135

Re: Environmental Review
1. Letter dated December 10, 2018: Wastewater Treatment Plant Project to Serve the City of Coweta

Dear Mr. Wyatt:

In response to your requests, we have completed an environmental review of air, land and water records for the above-referenced projects. Additional recommendations to consider as you complete your projects may be found at https://go.usa.gov/xnhCm.

Comments:

While no environmental concerns under DEQ jurisdiction are anticipated, please be aware of the following regulatory requirements.

1. Prior to beginning any construction activity disturbing more than one acre, you must submit an NOI and obtain authorization under OKR10, construction stormwater.

2. Water and wastewater infrastructure projects that will require a construction permit from DEQ's Water Quality Division include the following:

   - Construction of new water and wastewater treatment facilities;
   - Modifications and upgrades to existing facilities;
   - Construction of new water distribution and wastewater collection lines;
   - Relocation of existing water distribution and wastewater collection lines.

   Projects that do not require a construction permit include:

   - Replacement of existing equipment with same type and size equipment;
   - Replacement of existing water and wastewater lines with the same size line in the same location.

Please contact the DEQ's Water Quality Division (Construction Permitting Section) if you have specific questions about these projects or need clarification. Rocky Chen is the Manager of this section and can be reached at (405) 702-8140 or rocky.chen@deq.ok.gov.

Future requests may be submitted electronically to EnvReviews@deq.ok.gov by attaching a single pdf file containing your request and any attachments.

If you have any questions or need clarification, please contact me at (405) 702-7111 or EnvReviews@deq.ok.gov.

Sincerely,

Jon A. Roberts, Senior Manager
Office of External Affairs

Attachment 28.

Grand River Dam Authority (GRDA) Correspondence

December 10, 2018

Grand River Dam Authority
226 W. Dwain Willis Ave.
Vinita, OK 74301

To Whom It May Concern:

Re: Wastewater Treatment Plant Project to Serve the City of Coweta

The Coweta Public Works Authority (CPWA) owns a publicly owned wastewater treatment works (POTW) that serves the residents of the City of Coweta. The POTW consists of a wastewater collection system, and wastewater treatment plant (WWTP) utilizing flow-through lagoons equipped with mechanical aeration followed by a polishing pond, and disinfection basin.

The CPWA is projected to grow at a pace exceeding the state average for the next 20 years. The CPWA is expanding their wastewater treatment plant to meet the projected growth. The project will be funded through a loan from the Oklahoma Water Resources Board (OWRB) - Clean Water State Revolving Fund (CWSRF) in the amount of $11,308,168. Compliance with the National Environmental Protection Act of 1969 (NEPA) and the Environmental Review procedures for CWSRF projects is required on this project.

The proposed project consists of modifying and upgrading the existing WWTP to accommodate an average daily flow up to 1.5 MGD. The proposed project includes: a new influent lift station; lagoon system improvements; aeration basin improvements; two (2) new aerobic sludge digesters; a new flow equalization basin; two (2) new secondary clarifiers, an activated sludge pump station; sludge drying beds improvements; and disinfection basin modifications.

The project location is the N½, SW1/4, Section 30, Township 17 North, Range 16 East, Indian Meridian, Wagoner County, Oklahoma. All construction will be on the existing plant site which is mowed and maintained by CPWA staff. **Location map is included.**

On-site inspections will be carried out while construction is in progress. No individuals will be displaced because of this project. To complete the environmental review, we would appreciate a written response on the proposed project from your agency. **Please comment on any agency areas of concern.** We do not anticipate that the proposed project will have a significant impact on the environment and appreciate your assistance and response.

Sincerely,

David Wyatt, P.E.
WDB Engineering, PLLC.

Attachment 29.

US Environmental Protection Agency (EPA) Environmental Justice Screening Report

EJSCREEN Report (Version 2018)

1 mile Ring Centered at 35.921973,-95.650733, OKLAHOMA, EPA Region 6

Approximate Population: 201

Input Area (sq. miles): 3.14

Selected Variables	State Percentile	EPA Region Percentile	USA Percentile
EJ Indexes			
EJ Index for PM2.5	60	44	59
EJ Index for Ozone	59	44	59
EJ Index for NATA* Diesel PM	64	45	60
EJ Index for NATA* Air Toxics Cancer Risk	60	44	59
EJ Index for NATA* Respiratory Hazard Index	61	44	60
EJ Index for Traffic Proximity and Volume	64	46	60
EJ Index for Lead Paint Indicator	60	53	63
EJ Index for Superfund Proximity	60	44	59
EJ Index for RMP Proximity	58	43	58
EJ Index for Hazardous Waste Proximity	59	43	58
EJ Index for Wastewater Discharge Indicator	83	75	83

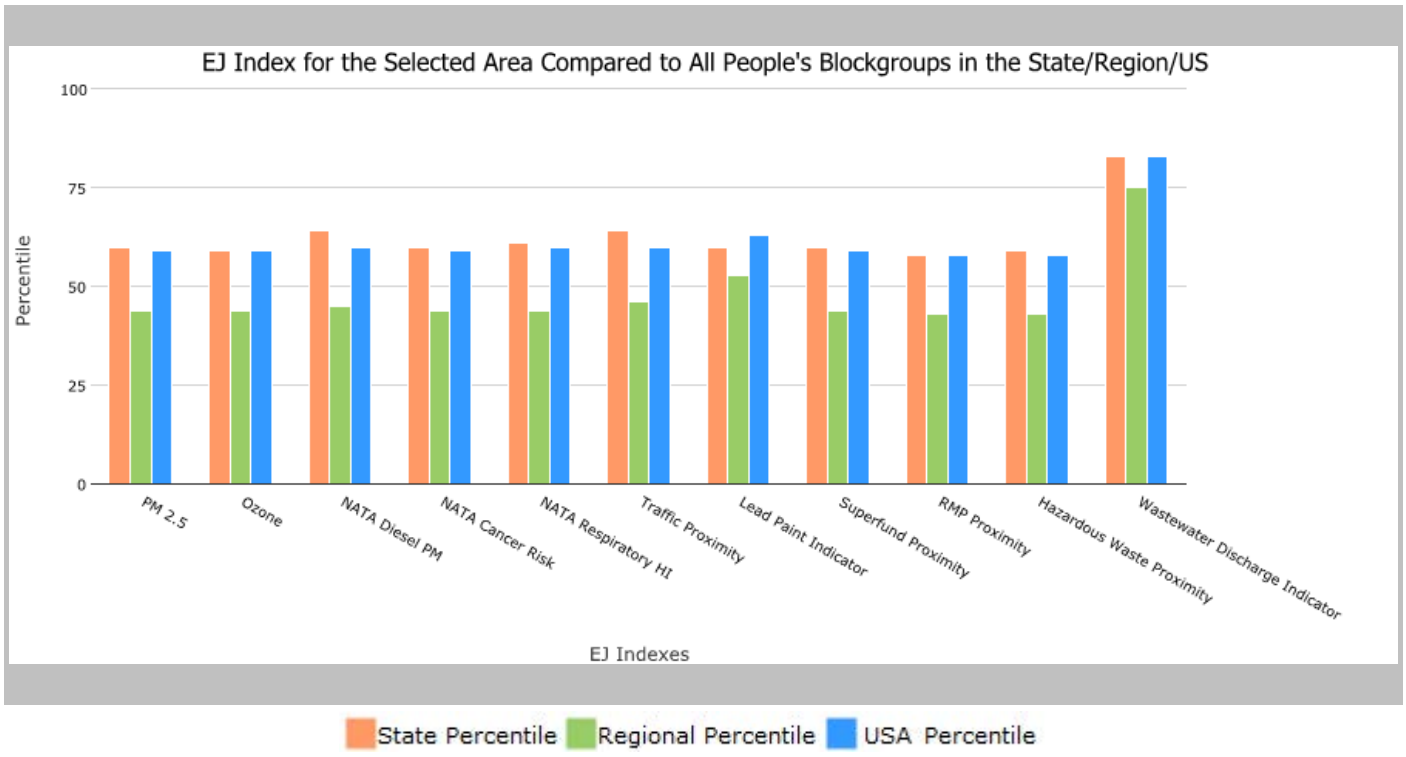

This report shows the values for environmental and demographic indicators and EJSCREEN indexes. It shows environmental and demographic raw data (e.g., the estimated concentration of ozone in the air), and also shows what percentile each raw data value represents. These percentiles provide perspective on how the selected block group or buffer area compares to the entire state, EPA region, or nation. For example, if a given location is at the 95th percentile nationwide, this means that only 5 percent of the US population has a higher block group value than the average person in the location being analyzed. The years for which the data are available, and the methods used, vary across these indicators. Important caveats and uncertainties apply to this screening-level information, so it is essential to understand the limitations on appropriate interpretations and applications of these indicators. Please see EJSCREEN documentation for discussion of these issues before using reports.

EJSCREEN Report (Version 2018)

1 mile Ring Centered at 35.921973,-95.650733, OKLAHOMA, EPA Region 6

Approximate Population: 201

Input Area (sq. miles): 3.14

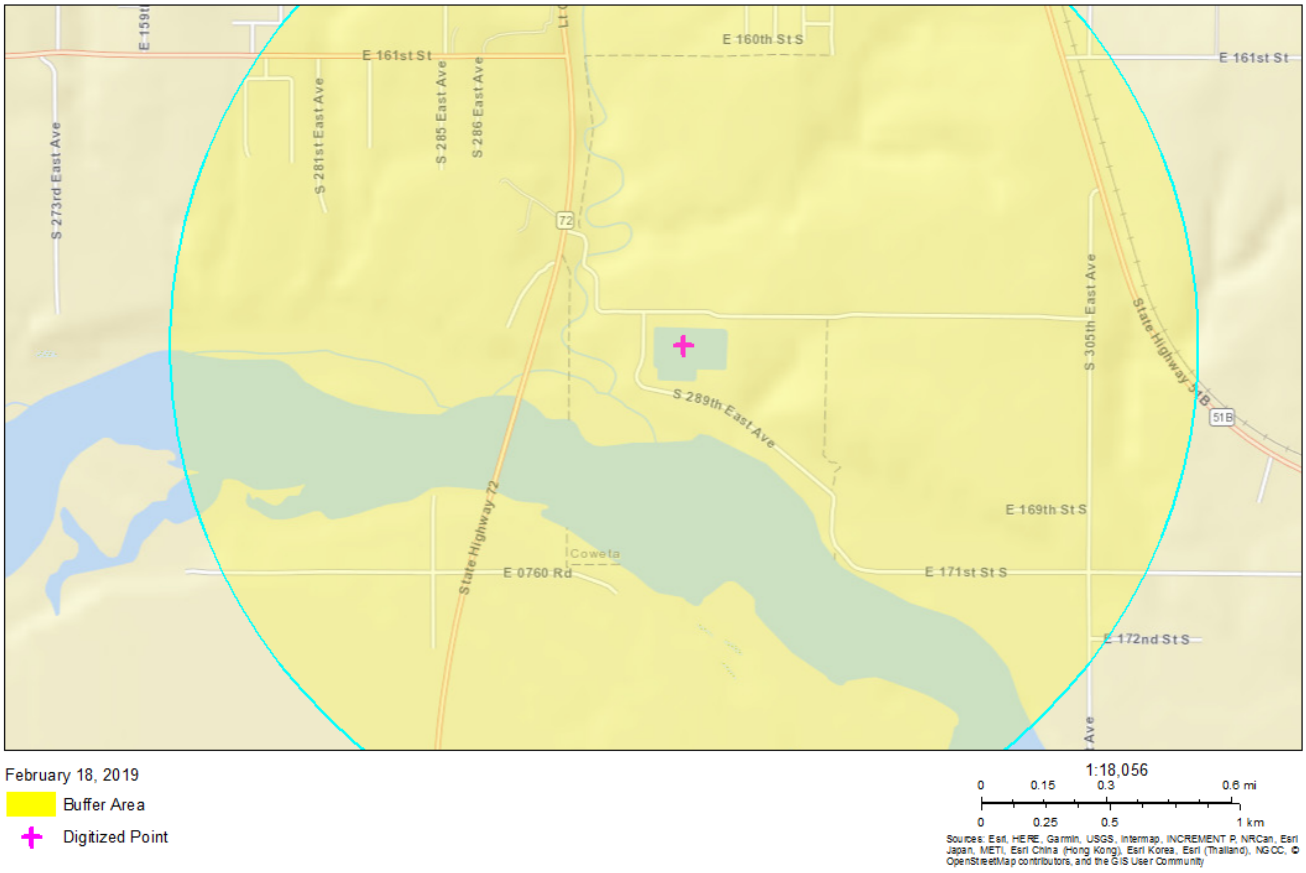

Sites reporting to EPA	
Superfund NPL	0
Hazardous Waste Treatment, Storage, and Disposal Facilities (TSDF)	0

EJSCREEN Report (Version 2018)

1 mile Ring Centered at 35.921973,-95.650733, OKLAHOMA, EPA Region 6

Approximate Population: 201

Input Area (sq. miles): 3.14

Selected Variables	Value	State Avg.	%ile in State	EPA Region Avg.	%ile in EPA Region	USA Avg.	%ile in USA
Environmental Indicators							
Particulate Matter (PM 2.5 in µg/m^3)	9.82	9.36	84	9.55	53	9.53	53
Ozone (ppb)	42.1	44.8	15	40.4	62	42.5	46
NATA* Diesel PM (µg/m^3)	0.931	0.527	87	0.721	70-80th	0.938	60-70th
NATA* Cancer Risk (lifetime risk per million)	50	45	82	42	80-90th	40	80-90th
NATA* Respiratory Hazard Index	2.5	1.9	88	1.8	80-90th	1.8	80-90th
Traffic Proximity and Volume (daily traffic count/distance to road)	24	83	44	320	28	600	29
Lead Paint Indicator (% Pre-1960 Housing)	0.065	0.24	33	0.18	48	0.29	30
Superfund Proximity (site count/km distance)	0.02	0.047	34	0.07	38	0.12	24
RMP Proximity (facility count/km distance)	0.033	0.55	3	0.8	5	0.72	5
Hazardous Waste Proximity (facility count/km distance)	0.042	0.59	14	0.86	14	4.3	10
Wastewater Discharge Indicator (toxicity-weighted concentration/m distance)	0.004	0.32	77	0.38	78	30	75
Demographic Indicators							
Demographic Index	37%	35%	60	44%	44	36%	59
Minority Population	37%	33%	68	51%	39	38%	57
Low Income Population	37%	38%	50	38%	51	34%	60
Linguistically Isolated Population	0%	2%	52	6%	35	4%	44
Population With Less Than High School Education	15%	13%	66	17%	53	13%	66
Population Under 5 years of age	7%	7%	58	7%	55	6%	64
Population over 64 years of age	7%	14%	14	13%	28	14%	19

* The National-Scale Air Toxics Assessment (NATA) is EPA's ongoing, comprehensive evaluation of air toxics in the United States. EPA developed the NATA to prioritize air toxics, emission sources, and locations of interest for further study. It is important to remember that NATA provides broad estimates of health risks over geographic areas of the country, not definitive risks to specific individuals or locations. More information on the NATA analysis can be found at: https://www.epa.gov/national-air-toxics-assessment.

For additional information, see: www.epa.gov/environmentaljustice

EJSCREEN is a screening tool for pre-decisional use only. It can help identify areas that may warrant additional consideration, analysis, or outreach. It does not provide a basis for decision-making, but it may help identify potential areas of EJ concern. Users should keep in mind that screening tools are subject to substantial uncertainty in their demographic and environmental data, particularly when looking at small geographic areas. Important caveats and uncertainties apply to this screening-level information, so it is essential to understand the limitations on appropriate interpretations and applications of these indicators. Please see EJSCREEN documentation for discussion of these issues before using reports. This screening tool does not provide data on every environmental impact and demographic factor that may be relevant to a particular location. EJSCREEN outputs should be supplemented with additional information and local knowledge before taking any action to address potential EJ concerns.

Attachment 30.

Indian Nations Council of Governments (INCOG) Correspondence

February 20, 2019

Indian Nations Council of Governments
2 West 2nd Street, Suite 800
Tulsa, OK 74103-3116

To whom it may concern :

Re: Wastewater Treatment Plant Project to Serve the City of Coweta

The Coweta Public Works Authority (CPWA) owns a publicly owned wastewater treatment works (POTW) that serves the residents of the City of Coweta. The POTW consists of a wastewater collection system, and wastewater treatment plant (WWTP) utilizing flow-through lagoons equipped with mechanical aeration followed by a polishing pond, and disinfection basin.

The CPWA is projected to grow at a pace exceeding the state average for the next 20 years. The CPWA is expanding their wastewater treatment plant to meet the projected growth. The project will be funded through a loan from the Oklahoma Water Resources Board (OWRB) - Clean Water State Revolving Fund (CWSRF) in the amount of $11,308,168. Compliance with the National Environmental Protection Act of 1969 (NEPA) and the Environmental Review procedures for CWSRF projects is required on this project.

The proposed project consists of modifying and upgrading the existing WWTP to accommodate an average daily flow up to 1.5 MGD. The proposed project includes: a new influent lift station; lagoon system improvements; aeration basin improvements; two (2) new aerobic sludge digesters; a new flow equalization basin; two (2) new secondary clarifiers, an activated sludge pump station; sludge drying beds improvements; and disinfection basin modifications.

The project location is the N½, SW1/4, Section 30, Township 17 North, Range 16 East, Indian Meridian, Wagoner County, Oklahoma. All construction will be on the existing plant site which is mowed and maintained by CPWA staff. **Location map is included.**

On-site inspections will be carried out while construction is in progress. No individuals will be displaced because of this project. To complete the environmental review, we would appreciate a written response on the proposed project from your agency. **Please comment on any agency areas of concern.** We do not anticipate that the proposed project will have a significant impact on the environment and appreciate your assistance and response.

Sincerely,

David Wyatt, P.E.
WDB Engineering, PLLC.

NOTICE OF PUBLIC HEARING
COWETA PLANNING COMMISSION
CWSRF PROJECT NO. ORF-19-0002-CW

The Coweta Planning Commission will hold a public hearing at 6:30 P.M. on March 25, 2019 in the council chambers of the City Hall. The hearing is to discuss proposed improvements to the Coweta Wastewater Treatment Facility along with alternatives and their associated costs. One purpose of the hearing is to discuss the potential environmental impacts of the project.

The proposed project is identified in the Planning and Environmental Information Document and consists of upgrading the existing WWTP to accommodate an average daily flow of 1.5 MGD. The project includes: a new influent lift station; lagoon system improvements; aeration basin improvements; two (2) new aerobic sludge digesters; a new flow equalization basin; two (2) new secondary clarifiers, an activated sludge pump station; sludge drying beds improvements; and disinfection basin modifications.

The Planning document which includes environmental information is on file and available for public inspection at City Hall, 310 South Broadway, Coweta, Oklahoma. These documents provide a detailed description of the project, cost, alternatives considered, and environmental effects.

CITY OF Coweta
POST OFFICE BOX 850 • COWETA, OKLAHOMA 74429 • PH. (918) 486-2189 • FAX (918) 486-5366 • www.cityofcoweta-ok.gov

Memorandum

To: Planning Commission
From: Tom E Young Jr, City Planner
Re: Preliminary Plat Coweta Crossing East 300 – Phase I
Date: 06-24-2019

BACKGROUND

Discuss and consider possible action, including approval, approval with conditions, or denial of a request by TJT Enterprises, LLC Woods Management Enterprises, LLC, Developer JR Donelson, Inc., Engineer for Preliminary Plat approval of Coweta Crossing East300 – Phase I, a Residential Development Golf Community with RS-2 Residential Single Family, and RM-1 Residential Multi-Family Development for an area approximately 52.03 acres more or less, located in the NW 1/4 and N/2 SW/4 and W/2 E/2 of Section 36, Township 18 North Range 15 East of the Indian Base and Meridian, Wagoner County, State of Oklahoma.

Coweta Crossing East300 – Phase I is part of Coweta Crossing, Planned Unit Development No. PUD-R 13-02 a Residential Development Golf Community with RS-2 Residential Single Family, RM-1 Residential Multi-Family and CG Commercial General Mixed Use Development for an area approximately 366.28 acres located on the east side of State Highway 51 and South of East 111th Street South in the Northeast Quarter of Section 35, Township 18 North, Range 15 East, and the West Half of the Northeast Quarter of Section 36, Township 18 North Range 15 East, of the Indian Base and Meridian, Wagoner County, State of Oklahoma.

PUD-R 13-02 Planned Unit Development is an abandonment of PUD-R 07-01 that was approved by the Coweta Planning April 23, 2007 and by the Coweta City Council May 7, 2007. PUD-C 12-02 was approved by the Coweta Planning June 25, 2012 and by the Coweta City Council July 2, 2012. PUD-R 07-01 was intended to accommodate primarily residential uses, with nonresidential uses integrated into the design of such districts as secondary uses and PUD-C 12-2 was intended to accommodate primarily non-residential uses for Commercial Development. PUD-R 13-02 is intended to accommodate primarily residential uses, with nonresidential mixed-uses integrated into the design of such districts as secondary uses

At the February 24, 2014 Planning Commission meeting, a public hearing before the Planning Commission was for an amendment to the City zoning map repealing the zoning designation and abandonment of PUD-R 07-01, PUD-C 12-02 and recommendation with regard to the design for a new zoning district, PUD-R 13-02.

At the February 24, 2014 Planning Commission meeting, the Planning Commission recommended approval for PUD-R 13-02.

At the March 3, 2014 City Council meeting a public hearing before the City Council was for an amendment to the City zoning map repealing the zoning designation and abandonment of PUD-R 07-01, PUD-C 12-02 and recommendation with regard to the design for a new zoning district, PUD-R 13-02.

At the March 3, 2014 City Council meeting, the City Council approved Ordinance No. 744 making it effective immediately.

Utilities/Site Area: The 52.03 acre more or less, the subdivision is proposed to be served by City Water and City Sewer with the Developer extension of the utility lines. Windstream, ONG, AEP and Cox have all been notified and a No Meet, Technical Advisory Committee meeting was held on June 6, 2019.

STAFF RECOMMENDATION

The Planning Commission can approve, conditionally approve, or disapprove the preliminary plat. If the preliminary plat is approved with conditions, the Planning Commission may require the subdivider to submit a revised preliminary plat. The subdivider shall be advised of any amendments required by the Planning Commission to comply with these regulations. If the preliminary plat is disapproved, the reasons for that action shall be stated.

Staff recommends approval of the Preliminary Plat, Coweta Crossing East300 – Phase I, with the condition that the developer meets the comments from the Technical Advisory Committee and the City Engineer.

No roadwork and/or utility work shall begin until the city has received approved DEQ permits. All Performance Bonds are in place, sanitary sewer, water mains, storm sewer, and roads. The City Inspector will need to do daily inspections as needed when construction starts on the utilities and roads.

ATTACHMENTS

1. Preliminary Plat for, Coweta Crossing East300 – Phase I

POST OFFICE BOX 850 * COWETA, OKLAHOMA 74429. PH. (918) 486-2189 FAX (918) 486-5366
www.cityofcoweta-ok.gov

AGENDA
TECHNICAL ADVISORY COMMITTEE MEETING
NO MEETING SEND

1. Discuss and consider a request by TJT Enterprises, LLC, Developer; Engineer/Surveyor: JR Donelson, for Preliminary Plat Coweta Crossing East300 – Phase I, a Residential Development Golf Community with RS-2 Residential Single Family, and RM-1 Residential Multi-Family Development for an area approximately 52.03 acres more or less, located in the NW 1/4 and N/2 SW/4 and W/2 E/2 of Section 36, Township 18 North Range 15 East of the Indian Base and Meridian, Wagoner County, State of Oklahoma.

   Coweta Crossing East300 is part of Coweta Crossing, Planned Unit Development No. R 13-02 a Residential Development Golf Community with RS-2 Residential Single Family, RM-1 Residential Multi-Family and CG Commercial General Mixed Use Development for an area approximately 366.28 acres located on the east side of State Highway 51 and South of East 111th Street South in the Northeast Quarter of Section 35, Township 18 North, Range 15 East, and the West Half of the Northeast Quarter of Section 36, Township 18 North Range 15 East, of the Indian Base and Meridian, Wagoner County, State of Oklahoma.

   Please fax a letter to me at 486-5366 with your comments regarding this request or I can also be reached via e-mail at tyoung@cityofcoweta-ok.gov

   If you have any questions about this request please feel free to contact me at 486-2189.

   Thank You

Tom E Young Jr.
City Planner
City of Coweta
918 279-7215
tyoung@cityofcoweta-ok.gov

OWNER:
TJT ENTERPRISES, LLC
809 No. 16th St.
BROKEN ARROW, OK. 74012
CONTACT: TOMMY THOMPSON

ENGINEER/SURVEYOR:
JR DONELSON, INC.
12820 SO. MEMORIAL DRIVE
OFFICE 100
BIXBY, OKLAHOMA 74008
PHONE: 918-394-3030
C.A. NO.: 5611
EXP. DATE: 6/30/2019

PRELIMINARY PLAT

COWETA CROSSING EAST 300 PHASE 1

PUD-R 13-02

AN ADDITION TO THE CITY OF COWETA, WAGONER COUNTY, OKLAHOMA, SITUATED IN THE W/2 OF SECTION 36, T-18-N, R-15-E, OF THE I.B.M.

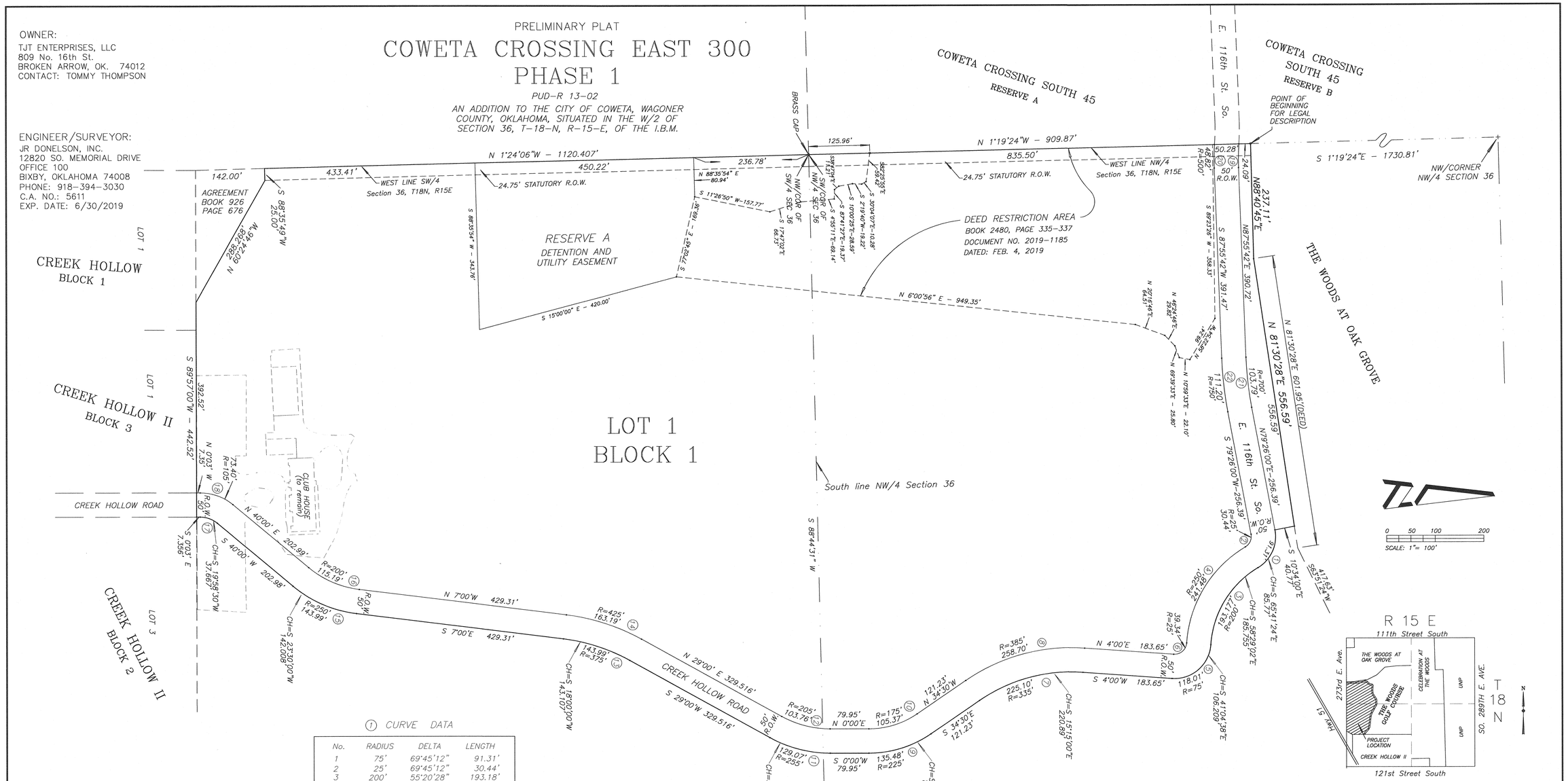

① CURVE DATA

No.	RADIUS	DELTA	LENGTH
1	75'	69°45'12"	91.31'
2	25'	69°45'12"	30.44'
3	200'	55°20'28"	193.18'
4	250'	55°20'28"	241.48'
5	75'	90°09'16"	118.01'
6	25'	90°09'16"	39.34'
7	335'	38°30'00"	225.10'
8	385'	38°30'00"	258.70'
9	225'	34°30'00"	135.48'
10	175'	34°30'00"	105.37'
11	255'	29°00'00"	129.07'
12	205'	29°00'00"	103.76'
13	375'	22°00'00"	143.99'
14	425'	22°00'00"	163.19'
15	250'	33°00'00"	143.99'
16	200'	33°00'00"	115.19'
17	55'	40°03'00"	38.45'
18	105'	40°03'00"	73.40'
19	450	6°13'47"	48.93'
20	500'	5°35'38"	48.82'
21	700'	8°29'42"	103.79'
22	750'	8°29'42"	111.20'

LEGEND

R	=	RADIUS
CH	=	CHORD BEARING AND DISTANCE
NW/4	=	NORTHWEST QUARTER
①	=	CURVE DATA
R.O.W.	=	RIGHT OF WAY

SECTION 36

LOCATION MAP

SCALE: 1"=2000'

SUBDIVISION CONTAINS:
AREA: 52.03 ACRES
NO. LOTS 1
NO. BLOCKS 1
FILE: C:\cowcross300fp051519.dwg

NOTES:

1. BASIS FOR BEARINGS: NOTE: The basis for bearings for the survey shown thereon is the West Line of the NW/4 Section 36, T-18-N, R-15-E. S 29°47'51"E.
2. THIS PLAT MEETS THE OKLAHOMA MINIMUM STANDARDS FOR THE PRACTICE OF LAND SURVEYING AS ADOPTED BY THE OKLAHOMA STATE BOARD OF REGISTRATION FOR PROFESSIONAL ENGINEERS AND SURVEYORS.

COWETA CROSSING EAST 300
PHASE 1
DATE OF PREPARATION: MAY 15, 2019

SHEET 1

DEED OF DEDICATION AND STATEMENT OF RESTRICTIVE COVENANTS
COWETA CROSSING EAST 300 PHASE 1

PUD–R 13–02

KNOW ALL MEN BY THESE PRESENTS:

WHEREAS, 'TJT ENTERPRISES, LLC'. an Oklahoma Limited Liability Company is the owner in fee simple to the following described property in the City of Coweta, Wagoner County, Oklahoma, to–wit:

A tract of land situated in the West Half (W/2) of Section 36, T–18–N, R–15–E, of the Indian Base and Meridian, Wagoner County, State of Oklahoma, according to the United States Government survey thereof, being more particularly described as follows, to–wit:

Commencing at the Northwest corner of said Section 36; thence with an assumed bearing of S 01°19'24"E and along the West line of the Northwest Quarter (NW/4) of Section 36 for 1730.81 feet to the Point of Beginning: thence N 88°40'45"E and along the South line of The Woods at Oak Grove for 237.11 feet; thence N 81°30'28"E for 556.59 feet; thence S 10°34'00" E for 40.74 feet: thence along a curve to the right having a radius of 75.00 feet, a central angle of 69°45'12" with a curve length of 93.31 feet and a chord bearing of S 65°41'24" E, with a chord distance of 85.77 feet to a point of reverse curve: thence on a curve to the left, having a radius of 200.00 feet; a central angle of 55°20'28", with a curve length of 193.18 feet, and a chord bearing of S 58°29'02" E, with a chord distance of 185.76 feet to a point of reverse curve: thence on a curve to the right, having a radius of 75.00 feet, a central angle of 90°09'16", with a curve length of 118.01 feet and a chord bearing of S 41°04'38" E and a chord distance of 106.21 feet; thence S 04°00'00" W, for 183.62 feet to a point of curve; thence along a curve to the left, having a radius of 335.00 feet, a central angle of 38°30'00", with a curve length of 225.10 feet; and a chord bearing of S 15°15'00" E and a chord distance of 220.89 feet; thence S 34°30'30" E for 121.23 feet to a point of curve; thence along a curve to the left, having a radius of 225.00 feet, a central angle of 34°30'00", with a curve length of 135.48 feet, and a chord bearing of S 17°15'00" E and a chord distance of 133.44 feet; thence S 0°00'00" W for 79.95 feet to a point of curve; thence along a curve to the right having a radius of 255.00 feet, a central angle of 29°00'00", with a curve length of 129.07 feet and a chord bearing of S 14°30'00" W, with a chord distance of 127.69 feet; thence S 29°00'00" W for 329.52 feet to a point of curve; thence along a curve to the left having a radius of 375.00 feet, a central angle of 22°00'00", with a curve length of 143.99 feet and a chord bearing of S 18°00'00" W, with a chord distance of 143.11 feet; thence S 7°00'00" W for 429.31 feet to a point of curve; thence along a curve to the right, having a radius of 250.00 feet, a central angle of 33°00'00", with a curve length of 143.99 feet and a chord bearing of S 23°30'00" W, with a chord distance of 142.01 feet; thence S 40°00'00" W for 202.98 feet to a point of curve; thence along a curve to the left, having a radius of 55.00 feet, a central angle of 40°03'00", with a curve length of 38.45 feet, with a chord bearing of S 19°58'30" W and a chord distance of 37.67 feet; thence S 0°03'00" E for 7.36 fee to the Northwest corner of Lot 3, Block 2, Creek Hollow II; thence S 89°57'00" W and along the North Line of Creek Hollow II and Creek Hollow for 442.52 feet; thence N 60°24'46" W for 288.27 feet; thence S 88°35'49" W for 25.00 feet to a point on the West Line of the Southwest Quarter (SW/4) of said Section 36; thence N 01°24'06" W and along the West Line of the Southwest Quarter (SW/4) for 1120.41 feet to the Northwest corner of the Southwest Quarter (SW/) of said Section 36; thence N 01°19'24" W and along the West line of the Northwest Quarter (NW/4) of said Section 36 for 909.87 feet to the Point of Beginning and containing 52.03 acres, more or less.

'TJT ENTERPRISES, LLC', shall be referred to in the Deed of Dedication as the "OWNER" and has caused the above described land to be surveyed, staked, platted, and subdivided into lots, blocks, and streets, in conformity with the accompanying plat and has designated the same as "COWETA CROSSING EAST 300 PHASE I", an Addition to the City of Coweta, Wagoner County, Oklahoma (hereinafter sometimes referred to as the "Subdivision". I hereby dedicate to the City of Coweta, its successors and assigns, all easements and rights–of–way as shown on this plat and do hereby guarantee clear title to all land that is dedicated for the purpose of providing an orderly development of the entire tract.

SECTION 1. PUBLIC COVENANTS

A. EASEMENTS, UTILITIES AND STREETS

The Owner hereby dedicates to the public the streets, as designated on the accompanying plat and does further dedicate for the public use the utility easements designated as "U/E" or "Utility Easement" for the several purposes of constructing, maintaining, operating, repairing, replacing, and/or removing any and all public utilities, including sanitary sewers, telephone and communication lines, electric power lines and transformers, gas lines, water lines and cable television lines, together with all fittings, including the poles, wires, conduits, pipes, valves, meters, manholes and equipment for each of such facilities and any other appurtenances thereto, with the rights of ingress and egress to and upon the utility easements for the uses and purposes stated, provided that the Owner reserves the right to construct, maintain, operate, lay and repair or replace water lines and sewer lines within the property owned by the particular owner, together with the right of ingress and egress for such construction, maintenance, operation, laying, repairing and re–laying over, across and along all of the utility easements depicted on the plat, for the purpose of furnishing water and/or sewer services to areas depicted on the plat. The Owner herein imposes a restrictive covenant, which covenant shall be binding on each lot owner and shall be enforceable by the City of Coweta, Oklahoma, and by the supplier of any affected utility service, that within the utility easements depicted on the accompanying plat no building, structure or other above or below ground obstruction that interferes with stated uses and purposes of the utility easements shall be placed, erected, installed or maintained, provided nothing herein shall be deemed to prohibit drives, parking areas, curbing, landscaping and customary screening fences which do not constitute an obstruction.

B. WATER, SANITARY SEWER, AND STORM SEWER SERVICE

1. The owner of any lot shall be responsible for the protection of the public water mains, sanitary sewer mains, and storm sewers located on the owners lot.
2. Within utility easements, waterline, sanitary sewer and drainage easements depicted on the accompanying plat, the alteration of grade from the contours existing upon the completion of the installation of a public water main, sanitary sewer main, or any construction activity which, in the judgment of the City of Coweta, would interfere with public water mains, sanitary sewer mains, shall be prohibited.
3. The City of Coweta, Oklahoma, or its successors, shall be responsible for ordinary maintenance of public water systems, sanitary sewer mains, but the owner shall pay for damage or relocation of such facilities caused or necessitated by acts of the owners, or the owners agents and/or contractors. Storm sewers and drainage will be privately maintained.
4. The City of Coweta, Oklahoma, or its successors, shall at all times have right of access to all utility easements, waterline, sanitary sewer and drainage easements depicted on the accompanying plat, or otherwise provided for in this deed of dedication, for the purpose or installing, maintaining, removing or replacing any portion of underground water or sanitary sewer facilities.
5. The covenants set forth in this subsection shall be enforceable by the Owner, or its successors, and the owners of each lot, and the owners of each lot agree to be bound by these covenants.

C. PAVING AND LANDSCAPING WITHIN EASEMENTS

The owner of any lot depicted on the accompanying plat shall be responsible for the repair of damage to landscaping and paving occasioned by installation or necessary maintenance of underground water, sanitary sewer, storm sewer, natural gas, communication, cable television or electric facilities within the easement areas depicted upon the accompanying plat, provided the City of Coweta, Oklahoma, or its successors, or the supplier of the utility service, shall use reasonable care in the performance of such activities.

D. BUILDING PERMIT AND RESTRICTIONS

No Building Permit for a building within the Subdivision shall be issued by the City until construction of the required infrastructure (streets, water, sanitary sewer and storm sewer systems) serving the Subdivision has been completed and accepted by the City. Notwithstanding the foregoing, the City may authorize the phasing of the construction of infrastructure within the Subdivision. A Building Permit, for a building within an authorized phase may be issued upon the completion and acceptance of the infrastructure serving the particular phase. The City's acceptance shall be evidenced by a document executed by the Mayor of the City of Coweta (the "City's Acceptance of Intrastructure") and filed in the records of the Wagoner County Clerk.

E. STREET AND EASEMENT DEDICATIONS

The dedication of utility easements, other easements to the public, contained in this Section I, shall not take effect until a separate instrument titled "Formal Acceptance" or a similar instrument, formally accepting the dedications and infrastructure is recorded by the City of Coweta on behalf of public in the land records of the Wagoner County Clerk's office. However, the rights and uses outlined herein, necessary for the installation by private utilities of their facilities, I.E. electric, gas, telephone and communication, cable, etc., exclusive of those dedicated to the City of Coweta or the public, shall be in effect to allow access for surveying, excavating, construction, operating, and maintaining such facilities until the city files its formal acceptance and these rights and uses are subsumed by dedication to the public and acceptance by the city.

G. UTILITY SERVICE

1. Overhead lines for the supply of electric, telephone and cable television services may be located within the perimeter easements of the subdivision. Street light poles or standards may be served by overhead line or underground cable, and elsewhere throughout the subdivision, all supply lines including electric, telephone, cable television and gas lines shall be located underground in easements dedicated for general utility services as depicted on the accompanying plat. Service pedestals and transformers, as sources of supply at secondary voltages, may also be located in general utility easements.
2. Underground service cables and gas service lines to all structures within the subdivision may be extended from the nearest gas main, service pedestal or transformer to the point of usage determined by the location and construction of such structure upon the lot, provided upon installation of a service cable or gas service line to a particular structure, the supplier of service shall thereafter be deemed to have a definitive, permanent, effective and non–exclusive easement on the lot, covering a 5 foot strip extending 2.5 feet on each side of the service cable or line extending from the gas main, service pedestal or transformer to the service entrance on the structure.
3. The supplier of electric, telephone, cable television and gas service, through its agents and employees, shall at all times have the right of access to all utility easements shown on the plat or otherwise provided for in this deed of dedication for the purpose of installing, maintaining, removing or replacing any portion of the underground electric, telephone, cable television or gas facilities installed by the supplier of the utility service.
4. The Owners of any lot shall be responsible for the protection of the underground service facilities located on the Owners lot and shall prevent the alteration of grade or any construction activity which would interfere with the electric, telephone, cable television or gas facilities. Each supplier of these services shall be responsible for ordinary maintenance of underground facilities, but the owners of the lot shall pay for damage or relocation of such facilities caused or necessitated by acts of the owner of the lot or the Owner's agents or contractors.
5. The covenants set forth in this subsection shall be enforceable by each supplier of the electric, telephone, cable television or gas service and the owner of any lot agrees to be bound by these covenants.

H. GAS SERVICE

1. The supplier of gas service through its agents and employees shall at all times have the right of access to all utility easements shown on the plat or as otherwise provided for in this deed of dedication for the purpose of installing, removing, repairing, or replacing any portion of the facilities installed by the supplier of gas service.
2. The Owners of any lot shall be responsible for the protection of the underground gas facilities located within the lot and shall prevent the alteration of grade or any other construction activity which would interfere with gas service. The supplier of gas service shall be responsible for the ordinary maintenance of its facilities, but the owners shall pay for damage or relocation of facilities caused or necessitated by acts of the owner of the lot or its agents or contractors.
3. The covenants set forth in this subsection shall be enforceable by the supplier of the gas service and the owner of the lot agrees to be bound by these covenants.

I. SURFACE DRAINAGE

Each lot shall receive and drain, in an unobstructed manner, the stormwater from lots and drainage areas of higher elevation. No lot owner shall construct or permit to be constructed any fencing or other obstructions which would impair the drainage of storm and surface waters over and across the owners lot. The covenants set forth in this subsection shall be enforceable by any affected lot owner.

J. ROOF DRAIN REQUIREMENTS

The Owner hereby imposes a restrictive covenant, which covenant shall be binding on each affected lot owner and shall be enforceable by the Owner and each lot owner, that buildings constructed on all lots, shall each have roof drains designed and constructed to discharge stormwater runoff to the adjacent street or parking lot.

K. RESERVE "A"

RESERVE "A" will be used for storm water retention/detention and a general utility easement and also may be used for open space or park space, and will be maintained by the property owners association, and every lot owner.

SECTION 2. PLANNED UNIT DEVELOPMENT (PUD–R 13–02)

Usage of the following words shall having the following meanings, unless the context clearly requires otherwise: "City" shall mean the City of Coweta; "lot" shall mean a lot in the Subdivision.; "lot owner" shall mean a lot owner in the Subdivision; "plat" shall mean the accompanying plat of the Subdivision; and "zoning code" shall mean the City of Coweta Zoning Code.

The Planned Unit Development Restrictions are established for the mutual benefit of the Owners, their successors and assigns, and the City of Coweta, Oklahoma, for the purpose of providing an orderly development of the Subdivision and for maintaining conformity of the improvements therein, the following covenants and restrictions hereby are imposed upon the use and occupancy of the lots within the Subdivision.

LANDSCAPED AREA AND SCREENING

(1) All development and construction shall comply with Chapter 24 of the Zoning Code.

(2) The landscaping concept is intended to achieve unity through out the Planned Unit Development as well as provide an attractive view of the project from surrounding streets and neighborhoods.

SIGNS

(1) Signage shall comply with Chapter 18 of the Zoning Code, with the maximum surface area of a temporary or permanent sign size being 192 square feet.

(2) No sign permits shall be issued for erection of a sign within the PUD until a detail sign plan for the property has been submitted to the City of Coweta official (who has authority to issue sign permits) and approved as being in compliance with the approved PUD development standards.

(3) Each and every sign will be architecturally pleasing and well landscaped.

LIGHTING

(1) Flashing signs, changeable copy signs, running light or twinkle signs, animated signs, revolving or rotating signs with movement shall be prohibited, except as may be permitted by the Coweta Zoning Code as part of the approved detail sign plan.

(2) Lighting used to illuminate the development area shall be so arranged as to shield and direct the light away from adjacent residential areas and residential uses within the PUD. No light standard or building–mounted light shall exceed five stories in height.

TRASH, MECHANICAL AND EQUIPMENT AREAS

(1) There shall be no storage of recyclable materials, trash or similar material outside a screened receptacle. All trash, mechanical and equipment areas, including building mounted, shall be screened from public view in such a manner that the areas cannot be seen from a public street.

TOPOGRAPHY, DRAINAGE AND UTILITIES

(1) Drainage. All storm water drainage structures shall be installed and maintained in accordance with all applicable City of Coweta Ordinances and regulations.

A Professional Engineer registered in the State of Oklahoma shall certify to the appropriate City official that all required stormwater drainage structures serving the Site have been installed in accordance with the approved plans, prior to issuance of an occupancy permit on that property.

During construction on the property, the owner will provide adequate and reasonable erosion control, and, after construction, they will provide and maintain vegetative, landscaped ground cover so that soil does not erode on or from the property.

(2) Utilities. Utilities are depicted on Exhibit E (of the PUD) Public water and sanitary sewer services are provided by the City of Coweta. AEP/PSO furnishes electricity to the entire site. Oklahoma Natural Gas (ONG) is the supplier of natural gas to the project.

ACCESS, CIRCULATION AND PARKING

Access, traffic circulation and parking areas depicted on Exhibit F, (of the PUD). Some of the drives and parking areas within the PUD may be privately owned and maintained. Public Streets through Development Area B will be publicly owned and maintained. Mutual access between and across individual properties and mutual parking privileges within the PUD shall be provided by a mutual access agreement to be recorded in office of the Wagoner County Clerk by the Owner/Developer.

Pedestrian access and circulation shall be depicted on the detailed site plan drawing and/or landscaped plan required by the City of Coweta. As stated above, all mutual acces drives in the PUD may be private drives, which shall be constructed in accordance with all applicable City of Coweta codes, regulations and standards.

RESTRICTIVE COVENANTS: ENFORCEMENT

If portions of the Site are platted, Restrictive covenants will be adopted and recorded for that PUD portion as platted. Owners of the respective platted parcels and or buildings in the PUD will be required by the covenants to keep and maintain the parcels and improvements in a clean and professional manner (the"Maintenance Covenant"). The Maintenance Covenant will be enforced by the owner or a property owners association for each platted parcel or building in the PUD.

PERMIT PREREQUISITES

No zoning clearance permit shall be issued until a detail site plan, including all buildings, parking, drives, walkways, and landscape areas, has been submitted to the Coweta City Planner and approved as being in compliance with PUD development standards and all other applicable standards of the City of Coweta.

SECTION 3. PRIVATE COVENANTS AND RESTRICTIONS

A. Private Covenants and Restrictions Applicable to all Lots. The following standards shall apply to all lots of the Subdivision unless specifically modified or superceded by more specific provisions adopted by the Owners as hereinafter provided.

1. Architectural Committee. The Owner may form an Architectural Committee (referred to in this document as the "Architectural Committee" or "Committee") for the Subdivision. If an Architectural Committee is not formed, 'TJT ENTERPRISES, LLC' shall perform all functions of the Architectural Committee. The Architectural Committee will:

   a. Review and approve all structures to be built on the lots in the Subdivision, and approve the site plan.
   b. Be responsible for interpreting all development and construction standards contained in this Deed of Dedication as applicable to the lots in the Subdivision.

The Committee shall consist of not less than one (1) nor more than three (3) members to be appointed by the Owner, until the Owner, in its sole discretion, assigns and transfers the responsibility for the appointment of the Committee to any Property Owners' Association formed.
No new building or improvements may be commenced on any lot in the Subdivision without the written approval of the Committee.

2. Required Plans. The architectural plans to be submitted and approved by the Committee shall include, at a minimum, the following with regard to each improvement to be constructed on any Lot in the Subdivision, prior to submittal to the City of Coweta.

   a. An accurate site plan;
   b. An accurate floor plan;
   c. All exterior elevations;
   d. A landscaping plan, including, but not limited to, the composition, location and height of fencing for trash receptacles;
   e. Any other plans or information requiring approval of the City of Coweta or any of its commissions or committees; and
   f. Details regarding the composition of all roofing and external building materials.

3. Building materials. Building designs, elevations and materials shall comply with minimum standards set forth in all applicable City of Coweta ordinances and regulations. Building designs, elevations and materials also shall be approved by the Architectural Committee. Any deviation of the exterior construction materials shall be permitted only with the written consent of the Architectural Committee.

4. Nuisance prohibited. No noxious or offensive trade or activity shall be carried on upon any lot in the Subdivision, nor shall anything be done thereon that may be or may become an annoyance or nuisance to the neighborhood. Each lot shall be maintained in a neat and orderly condition, free of rubbish, trash, and other debris and should be mowed to prevent growth of weeds and tall grass. Driveways, driveway aprons, parking lots, and drive aisles shall be maintained in a neat and orderly condition.

5. Permited uses will be in accordance with existing Zoning Codes and and PUD–R 13–02.

6. Developmental phasing, Lot division, single–use Lots. Developmental phasing shall be allowed. A lot in the Subdivision may be split or further subdivided with approval by the City of Coweta.
Lot splitting may also correct encroachments or other boundary deficiencies caused by errors in the platting, re–platting or surveying of the Subdivision or parts thereof and as directed by the City of Coweta, the Owners or except as otherwise provided in the Covenants.

7. Compliance. The development and use of the Subdivision shall be in compliance with the Plat and other plans approved by the City of Coweta regarding the Subdivision.

8. Minor Amendments. The Covenants shall be deemed amended (without necessity of execution of an amending document) to conform to amendments to bulk and area requirements and other minor amendments that subsequently may be approved by the City of Coweta Planning Commission or other agency of the City pursuant to its review of a minor amendment processed in accordance with the provisions of the City of Coweta Zoning Code.

9. Conflicts. If there is any conflict between these general standards and specific standards described herein for particular lots in the Subdivision, the specific standards shall control.

10. Owners/Developers Reservation of Right. The Owners/Developers reserves the right, in its sole discretion and without joinder or approval of any other owners of a particular lot in the Subdivision, so long as the Owners/Developers are the owners of any lot in any block in the Subdivision, to amend, revise or abolish any one or more of the above covenants and restrictions in Section 3, "Private Covenants and Restrictions" by instrument duly executed and acknowledged by Owners/Developers and filed in the Office of the Wagoner County Clerk.

11. RESERVE 'A' . RESERVE 'A' , as depicted on the plat will be utilized for storm water retention/detention and also may be used for open space or park space and/or a general utility easement.

12. RESERVE 'A' Maintenance.
The Property Owners Association and every lot owner, will be responsible for the maintenance of RESERVE "A", and any and all improvements situated in RESERVE 'A'.

13. No fence or wall shall be erected or placed on any Lot without the consent of the Architectural Committee. The Architectural Committe will review the material and location of all fencing, including that around trash dumpsters.

14. Easements for installation and maintenance of utilities and drainage facilities are reserved as shown on the recorded plat. Within these easements no structure, planting or other material, other than paved parking, shall be placed or permitted to remain which may damage or interfere with the installation and maintenance of utilities, or which may change the direction of flow or drainage in the easements or which may obstruct or retard the flow of water, and all improvements in it shall be maintained continuously by the owner of the Lot, except for those improvements for which a public authority or utility company is responsible or for repairing or replacing any damaged parking lot paving.

15. No structure or vehicle such as a trailer, basement, tent, shack, garage, barn, camper, mobile home or other outbuilding shall be used on any Lot any time as residence. Trailers may be used temporarily during the process of constructing a permanent building on a Lot.

16. All signs are prohibited on these Lots and buildings thereon except:
   (a) Signs that meet the current City of Coweta Codes regulating the location, design and quality of maintenance;
   (b) Signs erected by the City of Coweta or County of Wagoner for identification of streets, traffic control and directional purposes;
   (c) Signs of a temporary nature advertising property for sale and construction signs, which signs shall not exceed 30 square feet in area unless approved by the Owners;
   (d) Signs erected by the Owners advertising the name and entrance of the sold properties;
   (e) Promotional banners may be displayed, if Coweta City Zoning Codes allow, for a maximum of 14 days;
   (f) All site specific signs must be approved by the Architectural Committee.

17. No Lot shall be used or maintained as a dumping ground. Rubbish, trash, garbage and/or other wastes shall not be kept except in approved sanitary containers. All equipment for the storage and/or disposal of such rubbish, trash, garbage or other wastes shall be fenced from view and kept in a clean and sanitary condition.

18. All automobiles and other motorized vehicles on the Lots must be state licensed, state inspected and in running order at all times. All vehicles are to be parked at all times on the Lot hard surface.

19. No antenna, aerial, or other device except a roof mounted 18" satellite dish shall be permitted on any structure where some from of TV cable is available, including pay satellite furnished by others. Where TV cable or pay satellite is not available, Owner is permitted one (1) antenna which will be allowed for the sole purpose of television broadcast only, and such antenna shall be raised to a height necessary for the TV reception in the area. No CB, ham radio, satellite dish, or other antennas shall be permitted. The Architectural Committee or TJT Enterprises, LLC or its assigns may waive any item of this paragraph.

20. In the event that any lot is sold and no structure is immediately erected, at all times, the owner or owners of such lot or lots shall keep sold property mowed and in a sanitary condition at all times.

21. No building, fence, wall or other structure shall be commenced, erected or maintained upon the properties, nor shall any exterior addition to or change or alteration herein be made until the plans and specifications showing the nature, size, kind, shape, height, materials, and location of the same shall have been submitted to and approved in writing by the Architectural Committee. In the event said Committee fails to approve or disapprove, in writing, such design and location within thirty (30) days after said plans and specifications have been submitted to it, approval will not be required and this paragraph will be deemed to be fully complied with.

22. In the event a building on any Lot in said Subdivision is destroyed by fire or otherwise destroyed, the owner of said Lot shall raze the structure and clean off the tract or start to rebuild the structure within 120 days from the time the building was destroyed.

23. A minimum of 25% of the exterior walls of all buildings shall have concrete, brick, Dryvit or stone covering on the outside walls of the structure unless approved otherwise by Architectural Committee.

24. Sidewalks shall be 4 feet wide and be constructed 3 feet behind the curb unless approved otherwise by the City or the Architectural Committee.

25. No materials, supplies, equipment, finished or semi–finished products or articles of any nature shall be stored or permitted to remain on any building site outside of the building unless the same shall otherwise be screened by such walls, fences, and landscaping to attractively conceal areas visible from outside of the building site boundaries.

SECTION 4. PROPERTY OWNERS ASSOCIATION

A. TJT ENTERPRISES LLC, PROPERTY OWNER'S ASSOCATION.
The Owner will form the TJT Enterprises Property Owners Association, an Oklahoma not–for–profit corporation (the "Association"), prior to conveyance of any lot. The purpose of the Association is to operate, manage, repair, replace and maintain the common areas serving or benefitting Coweta Crossing South45 including, without limitation, signage, landscaping, storm drainage, retention/detention, other amenities, detention pond, traffic control equipment, streets, fences, line painting, sanitary control, removal of snow, trash, rubbish, garbage and other refuse, depreciation on or rentals of machinery and equipment, personnel to implement such services, direct pedestrian traffic and parking and police the common areas, any other activities necessary to keep such common areas in a good state of repair and enhance the value, security, desirability and attractiveness of Coweta Crossing East 300 Phase I.

B. Membership
Every lot owner or parcel owner in Coweta Crossing East 300 Phase I shall be a member of the Association. Membership shall be appurtenant to and may not be separated from the ownership of any lot or parcel in the Subdivision. The acceptance of a deed to one (1) or more lots or parcels shall constitue acceptance and membership in the Association as the date of recording of such deed.

C. Assessment by Association
Each lot or parcel owner within the Subdivision shall be subject to assessment by the Association for the purposes of operating, managing, repairing, replacing and maintaining the common areas serving or benefitting Coweta Crossing East 300 Phase 1, including, without limitation, signage, landscaping, storm drainage, retention/detention, storm sewer facilities, utility systems, sprinkler systems, easement areas and other amenities, detention pond, traffic control equipment, streets, fences, line painting, sanitary control, removal of snow, trash, rubbish, garbage and other refuse, depreciation on or rentals of machinery and equipment, personnel to implement such services, direct pedestrian traffic and parking and police the common areas, any other activities necessary to keep the common areas in a good state of repair and enhance the value, security, desirability and attractiveness of Coweta Crossing East 300 Phase I and such other purposes as the Board of Directors of the Association may, from time to time, determine pursuant to the By–Laws and Certificate of Incorporation of the Association.

D. Association Beneficiary of Covenants.
Without limitation of such powers and rights as the Association may have, the Association shall be deemed a beneficiary of the various covenants contained in this Deed of Dedication to the same extent as all other beneficiaries thereof, including each lot or parcel owner, and the supplier of any utility or other service within the Subdivision, and shall have the right to enforce these covenants and agreements.

E. Payment of Assessments.
Owners hereby covenant and each lot or parcel owner by acceptance of a deed to a lot or parcel, whether or not it shall be so expressed in such deed, is deemed to covenant and agree to pay the Association: (a) initial assessments; (b) monthly, quarterly or annual maintenance assessments; and (c) special assessments for capital improvements. Such assessments shall be established and collected as determined by the Association. The annual and special assessments, together with interest, costs and reasonable attorneys' fees, should be charged on each lot or parcel and shall be a continuing lien upon the lot or parcel against which the assessment is made. Each assessment, together with interest, cost and reasonable attorneys' fees, shall be the personal obligation of the owners of the lot or parcel at the time when the assessment became due. The personal obligation for delinquent assessments shall not pass through the successors–in–title unless expressly assumed by them. The Association shall fix the regular monthly, quarterly or annual assessments according to the provisions of the By–Laws and Certificate of Incorporation of the Association. In addition to the regular monthly, quarterly or annual assessments, authorized above, the Association may levy, in any assessment period, a special assessment applicable to the period only for the purpose of defraying, in whole or in part, the cost of any construction, reconstruction, maintenance, repairs or replacement of a capital improvement.

F. Delinquent Assessments.
Any assessment which is not paid when due shall be delinquent and shall constitute a lien on the lot or parcel against which the assessment is made. If the assessment is not paid within thirty (30) days after the due date, the assessment shall bear interest from the date of delinquency at the rate of interest per annum as set by the Board Directors from time to time, but not to exceed the maximum rate of interest allowed by law, and the Association may bring an action at law against the owner personally obligated to pay the same or foreclose its lien against the lot/parcel, or both, and interest, costs and reasonable attorneys' fees for any such action shall be added to the amount of the assessment. No owner may waive or otherwise escape liability for the assessments provided for herein by non–use or abandonment of such owner's lot or parcel.

G. Lien.
The lien of the assessments provided for herein shall be subordinate to the lien of any first mortgage. Sale or transfer of any lot or parcel shall not affect the assessment lien; provided, however, the sale or transfer of any lot or parcel pursuant to mortgage foreclosure or any proceeding in lieu thereof, shall extinguish the lien of such assessment as to payments which become due prior to such sale or transfer. No sale or transfer shall relieve the lot or parcel from the lien for assessments thereafter becoming due.

SECTION 5. ENFORCEMENT, DURATION, AMENDMENT, SEVERABILITY.

A. Enforcement
The restrictions herein set forth are covenants to run with the land and shall be binding upon the owner of each lot, its successors and assigns.
Covenants within Section 1, whether or not specifically therein so stated, shall inure to the benefit of and shall be enforceable by the Owner, the Property Owners Association, and any owner of any lot, and their respective successors and assigns in title.

Section 2. Planned Unit Development PUD–R 13–02 and provisions of the Coweta Zoning Code shall inure to the benefit of and shall be enforceable by the Owner, the Property Owners Association, and any owner of any lot, and their respective successors and assigns in title.

Section 3. Private Covenants and Restrictions, shall inure to the benefit of and shall be enforceable by the Owner, the Property Owners Association, and any owner of any lot, and their respective successors and assigns in title.

Section 4. Property Owners Association, shall inure to the benefit of and shall be enforceable by the Owner, the Property Owners Association, and any owner of any lot, and their respective successors and assigns in title.
If the undersigned Owners, or its successors or assigns, any owner of any lot, or any other person or entity, shall violate any of the covenants or restrictions contained herein, it shall be lawful for any owner of any lot, and/or the Property Owners Association, and their respective successors and assigns in title, as appropriate in accordance with their respective interests identified herein, to maintain any action at law or in equity against the person or persons or entity violating or attempting to violate any such covenant, to prevent it, him, her or them from so doing or to compel compliance or to recover damages. In any judicial action to enforce the provisions of this Plat and the Deed of Dedication and Statement of Restrictive Covenants, the prevailing party may recover reasonable costs and attorney fees.

B. Duration
These restrictions, to the extent permitted by applicable law, shall be perpetual but in any event shall be in force and effect for a term of not less than thirty (30) years from the date of the recording of this Deed of Dedication unless terminated or amended as hereinafter provided. Provided, if the 30 year limitation at any time shall be deemed to apply, then, at the expiration of such 30 year term, the restrictions shall be deemed to automatically renew for successive periods of seven (7) years, unless terminated or amended as provided herein or as allowed by law.

C. Amendment
The covenants contained within Section 1, Public Covenants, may be amended or terminated at any time by a written instrument signed and acknowledged by the owner of the land to which the amendment or termination is to be applicable and approved by the City of Coweta Planning Commission, or its successors, and the City of Coweta, Oklahoma. The covenants contained within Section 2, Planned Unit Development –R 13–02, may be amended or terminated at any time by a written instrument signed and acknowledged by the owner of the land to which the amendment or termination is to be applicable and approved by the City of Coweta Planning Commission, or its successors and the City of Coweta, Oklahoma.
The covenants contained within Section 3 Private Covenants and Restrictions, may be amended or terminated at any time by a written instrument signed and acknowledged by the owners of two–thirds (2/3) of the lots, parcels or land to which the amendment or termination is to be applicable.

D. Severability
Invalidation of any restriction set forth herein, or any part thereof, by an order, judgment, or decree of any Court, or otherwise, shall not invalidate or affect any of the other restrictions or any part thereof as set forth herein, which shall remain in full force and effect.

OWNER'S CERTIFICATE AND DEDICATION
The undersigned TJT Enterprises, LLC, an Oklahoma Limited Liability Company, does hereby certify that is the record owner of the land shown on the plat of COWETA CROSSING EAST 300 PHASE I, Coweta, Oklahoma and that the plat represents a correct survey of the above described property made with consent, and that it hereby dedicates to the public the utility easements as shown which are created for the installation and maintenance of public utilities, and rights–of–way, and transportation access, and that it hereby guarantees a clear title to all lands so dedicated from itself and its successors, heirs or assigns forever and have caused the same to be released from all encumbrances so that the title is clear, except as shown in the abstractor's certificate and executed this instrument in accordance with the requirements of final plats of the City of Coweta, Oklahoma this _____ day of _____,2019.

TJT ENTERPRISES, LLC
an Oklahoma Limited Liability Company

By: _____
Member–Manager

STATE OF OKLAHOMA)
) ss.
COUNTY OF)

This instrument was acknowledged before me on this _____ day of _____
_____ 20__, by _____ as Manager of TJT Enterprises, LLC, an Oklahoma Limited Liability Company.

_____
Notary Public

My commission expires: _____

CERTIFICATE OF SURVEY

I, Charles K. Howard, a Registered Land Surveyor, in the State of Oklahoma, do hereby certify that I have carefully and accurately surveyed, subdivided, and platted the tract of land described above, and that the accompanying plat designated herein as "Coweta Crossing East 300 Phase I", a subdivision in the City of Coweta, Wagoner County, State of Oklahoma, and is a representation of the survey made on the ground using generally accepted practices and meets or exceeds the Oklahoma Minimum Standards for the Practice of Land Surveying.

_____
Charles K. Howard, RLS 297
CA NO. 5611 EXP.DATE: 6/30/2019

STATE OF OKLAHOMA)
) ss.
COUNTY OF TULSA)

The foregoing Certificate of Survey was acknowledged before me on this _____ day of _____ 2019, by Charles K. Howard, RLS No. 297.

_____
Notary Public

My commission expires: _____

CITY OF COWETA PLANNING COMMISSION
The undersigned Chairman of the City of Coweta Planning Commission does hereby certify that the Planning Commission duly approved the plat of "Coweta Crossing East 300 Phase I".

_____ _____
Planning Commission Chairman Approved Date

CERTIFICATE OF FINAL PLAT APPROVAL
I hereby certify that this plat was approved by the Coweta City Council.

_____ _____
Mayor/Vice Mayor Approved Date

This approval is void if the above signature is not endorsed by the City Clerk.

_____
City Clerk

CERTIFICATE OF WAGONER COUNTY TREASURER

I DO HERE NOW STATE THAT THE TAXES HAVE BEEN PAID FOR THE YEAR 20 _____ AND PRIOR YEARS FOR THOSE PROPERTIES HEREIN LISTED TO BE DESIGNATED AS "Coweta Crossing East 300 Phase 1".

_____
BY:
WAGONER COUNTY TREASURER

WAGONER COUNTY CLERK

I _____, Wagoner County Clerk, in and for the County and State of Oklahoma above named, do here now state that the subdivision called " Coweta Crossing East 300 Phase I", has been filed into Wagoner County records.

Dated the _____day of _____, 2019.

Wagoner County Clerk

_____
Deputy

ORDINANCE 744

AN ORDINANCE AMENDING ORDINANCE NO. 377 AND CREATING A PLANNED UNIT DEVELOPMENT OVERLAY (PUD-R 13-02) FOR A TRACT OF LAND LOCATED IN THE CITY OF COWETA, WAGONER COUNTY, OKLAHOMA, AS MORE PARTICULARLY HEREINAFTER DESCRIBED, REPEALING ALL ORDINANCES OR PARTS OF ORDINANCES IN CONFLICT HEREWITH AND DECLARING AN EMERGENCY.

BE IT ORDAINED BY THE CITY COUNCIL OF THE CITY OF COWETA, OKLAHOMA, THAT, TO-WIT:

SECTION 1: That Ordinance No. 377 be and the same is hereby amended, placing a Planned Unit Development designation over the current CG Commercial General, RS-2 Residential Single Family, and RM-1 Residential Multi-Family zoning designation for the following described property, to wit:

Legal Description Overall (PUD Development Area)

A tract of land situated in the Sections 35 and 36, T-18-N, R-15-E, of the Indian Base and Meridian, Wagoner County, State of Oklahoma, according to the United States Government survey thereof, being more particularly described as follows, to-wit:

Commencing at the Northeast corner of the Northeast Quarter (NE/4) of said Section 35; thence with an assumed bearing of S 01°19'11"E and along the East line of Section 35 for 495.00 feet to the point of beginning; thence S 88°49'27"W for 790.00 feet; thence N01°19'24"W for 495.00 feet to a point on the north line of Section 35; thence S 88°49'27"W and along the North line of said Section 35 for 158.45 feet; thence S00°26'21"E for 721.89 feet; thence S 45°46'58"W for 96.12 feet; thence S89°07'12"W for 344.76 feet; thence N83°59'17"W for 100.00 feet; thence S89°07'12"W for 119.40 feet; thence S 74°41'28"W for 48.16 feet; thence S 89°07'12"W for 341.86 feet to a point on the East Right of Way line of State Highway 51; thence S29°47'51"E and along said East Right of Way line of State Highway 51 for 326.17 feet; thence N88°48'23"E for 248.08 feet; thence S29°47'51"E and parallel to the East Right of Way line of State Highway 51 for 400.00 feet; thence S 88°48'23"W for 248.08 feet to a point on the East Right of Way line of State Highway 51; thence S 29°47'51"E and along the East Right of Way line of State Highway 51 for 1061.49 feet; thence N 88°47'08"E for 450.00 feet; thence S29°47'51"E for 330.00 feet to a point on the South line of the Northeast Quarter (NE/4) of said Section 35; thence N88°47'08"E and along the South line of said NE/4 for 522.15 feet to the Southeast Corner of said Northeast Quarter (NE/4); thence S01°19'11"E and along the East line of said Section 35, also being the West line of Section 36 for 1121.05 feet; thence N 88°35'49"E for 25.00 feet; thence S60°24'46"E for 287.89 feet to a point on the South line of the N/2 of the SW/4 of said Section 36; thence N 89°57'00"E and along said South line of the N/2, SW/4 for 2349.14 feet to the Southeast corner of the N/2 of the SW/4 of said Section 36; thence S 01°22'05"E and along the West line of the SE/4 of said Section 36 for 992.47 feet to the Northwest Corner of the S/2, SW/4, SW/4, SE/4 of said Section36; thence N88°46'29"E for 659.90 feet to the

Northeast corner of the S/2, SW/4, SW/4, SE/4 of said Section 36; thence S 01°22'32"E and along the East line of said S/2, SW/4, SW/4, SE/4 for 330.17 feet to the Southeast Corner of the S/2, SW/4, SW/4, SE/4 of said Section 36; thence N 88°46'53"E and along the south line of said Section 36 for 659.95 feet to the Southeast corner of the W/2, SE/4 of said Section 36; Thence N 01°22'58"W and along the East line of the W/2, SE/4 of said Section 36 for 2641.55 feet to the Northeast corner of the W/2, SE/4 of said Section 36; thence N 01°23'32"W and along the East line of the SW/4, NE/4 of said Section 36 for 1321.20 feet to the Southeast corner of the NW/4, NE/4 of said Section 36; thence S88°44'22"W and along the South line of the NW/4, NE/4 for 330.22 feet; thence N 01°23'23"W for 1321.17 feet to a point on the north line of said Section 36; thence S 88°44'00"W and along the North line of said Section 36 for 987.94 feet to the Northwest corner of the W/2, NE/4 of said Section 36; thence S 01°22'19"E and along the West line of the NE/4 for 1121.11 feet; thence S88°37'41"W and along the South line of "The Woods at Oak Grove" for 569.09 feet; thence S 84°05'13"W and continuing along the South line of "The Woods at Oak Grove" for 507.91 feet; thence S46°34'28"W and continuing along the South line of "The Woods at Oak Grove" for 471.77 feet; thence S63°51'24"W and continuing along the South line of "The Woods at Oak Grove" for 417.63 feet; thence S81°30'28"W and continuing along the South line of "The Woods at Oak Grove" for 601.95 feet; thence S88°40'45"W and continuing along the South line of "The Woods at Oak Grove" for 237.11 feet to a point on the West line of said Section 36; thence N 01°19'11"W and along the West line of said Section 36 for 1235.81 feet to the point of beginning and containing 366.28 acres more or less.

Legal Description CG Commercial General Zoning District (PUD Development Area)

A tract of land situated in the Sections 35 and 36, T-18-N, R-15-E, of the Indian Base and Meridian, Wagoner County, State of Oklahoma, according to the United States Government survey thereof, being more particularly described as follows, to-wit:

Commencing at the Northeast corner of the Northeast Quarter (NE/4) of said Section 35; thence with an assumed bearing of S 01°19'11"E and along the East line of Section 35 for 495.00 feet to the point of beginning; thence S 88°49'27"W for 790.00 feet; thence N01°19'24"W for 495.00 feet to a point on the north line of Section 35; thence S 88°49'27"W and along the North line of said Section 35 for 158.45 feet; thence S00°26'21"E for 721.89 feet; thence S 45°46'58"W for 96.12 feet; thence S89°07'12"W for 344.76 feet; thence N83°59'17"W for 100.00 feet; thence S89°07'12"W for 119.40 feet; thence S 74°41'28"W for 48.16 feet; thence S 89°07'12"W for 341.86 feet to a point on the East Right of Way line of State Highway 51; thence S29°47'51"E and along said East Right of Way line of State Highway 51 for 326.17 feet; thence N88°48'23"E for 248.08 feet; thence S29°47'51"E and parallel to the East Right of Way line of State Highway 51 for 400.00 feet; thence S 88°48'23"W for 248.08 feet to a point on the East Right of Way line of State Highway 51; thence S 29°47'51"E and along the East Right of Way line of State Highway 51 for 1061.49 feet; thence N 88°47'08"E for 450.00 feet; thence S29°47'51"E for 330.00 feet to a point on the South line of the Northeast Quarter (NE/4) of said Section 35; thence N88°47'08"E and along the South line of said NE/4 for 522.15 feet to the Southeast Corner of said Northeast Quarter (NE/4); thence N01°19'11"W and along the East line of said Section 35, also being the West line of Section 36 for 2145.76 feet to the point of beginning and containing 66.245 acres more or less.

Legal Description RS-2 Residential Single Family Zoning District (PUD Development Area)

A tract of land situated in the Sections 35 and 36, T-18-N, R-15-E, of the Indian Base and Meridian, Wagoner County, State of Oklahoma, according to the United States Government survey thereof, being more particularly described as follows, to-wit:

Commencing at the Northeast corner of the Northeast Quarter (NE/4) of said Section 35; thence with an assumed bearing of S 01°19'11"E and along the East line of Section 35 for 495.00 feet ; thence S 88°49'27"W for 790.00 feet; thence N01°19'24"W for 495.00 feet to a point on the north line of Section 35; thence S 88°49'27"W and along the North line of said Section 35 for 158.45 feet; thence S00°26'21"E for 721.89 feet; thence S 45°46'58"W for 96.12 feet; thence S89°07'12"W for 344.76 feet; thence N83°59'17"W for 100.00 feet; thence S89°07'12"W for 119.40 feet; thence S 74°41'28"W for 48.16 feet; thence S 89°07'12"W for 341.86 feet to a point on the East Right of Way line of State Highway 51; thence S29°47'51"E and along said East Right of Way line of State Highway 51 for 326.17 feet; thence N88°48'23"E for 248.08 feet; thence S29°47'51"E and parallel to the East Right of Way line of State Highway 51 for 400.00 feet; thence S 88°48'23"W for 248.08 feet to a point on the East Right of Way line of State Highway 51; thence S 29°47'51"E and along the East Right of Way line of State Highway 51 for 1061.49 feet; thence N 88°47'08"E for 450.00 feet; thence S29°47'51"E for 330.00 feet to a point on the South line of the Northeast Quarter (NE/4) of said Section 35; thence N88°47'08"E and along the South line of said NE/4 for 522.15 feet to the Southeast Corner of said Northeast Quarter (NE/4) ; thence S01°19'11"E and along the East line of said Section 35, also being the West line of Section 36 for 501.83 feet to the **point of beginning**; thence continuing S 01°19'11"E and along the East line of said Section 35 for 619.22 feet; thence N 88°35'49"E for 25.00 feet; thence S60°24'46"E for 287.89 feet to a point on the South line of the N/2 of the SW/4 of said Section 36; thence N 89°57'00"E and along said South line of the N/2, SW/4 for 2349.14 feet to the Southeast corner of the N/2 of the SW/4 of said Section 36; thence S 01°22'05"E and along the West line of the SE/4 of said Section 36 for 992.47 feet to the Northwest Corner of the S/2, SW/4, SW/4, SE/4 of said Section36; thence N88°46'29"E for 659.90 feet to the Northeast corner of the S/2, SW/4, SW/4, SE/4 of said Section 36; thence S 01°22'32"E and along the East line of said S/2, SW/4, SW/4, SE/4 for 330.17 feet to the Southeast Corner of the S/2, SW/4, SW/4, SE/4 of said Section 36; thence N 88°46'53"E and along the south line of said Section 36 for 659.95 feet to the Southeast corner of the W/2, SE/4 of said Section 36; Thence N 01°22'58"W and along the East line of the W/2, SE/4 of said Section 36 for 2641.55 feet to the Northeast corner of the W/2, SE/4 of said Section 36; thence N 01°23'32"W and along the East line of the SW/4, NE/4 of said Section 36 for 1321.20 feet to the Southeast corner of the NW/4, NE/4 of said Section 36; thence S88°44'22"W and along the South line of the NW/4, NE/4 for 330.22 feet; thence N 01°23'23"W for 1321.17 feet to a point on the north line of said Section 36; thence S 88°44'00"W and along the North line of said Section 36 for 987.94 feet to the Northwest corner of the W/2, NE/4 of said Section 36; thence S 01°22'19"E and along the West line of the NE/4 for 1121.11 feet; thence S88°37'41"W and along the South line of "The Woods at Oak Grove" for 569.09 feet; thence S 84°05'13"W and continuing along the South line of "The Woods at Oak Grove" for 507.91 feet; thence S46°34'28"W and continuing along the South line of "The Woods at Oak Grove" for 471.77 feet; thence S63°51'24"W and continuing along the South line of "The Woods at Oak Grove" for 417.63 feet; thence S81°30'28"W and continuing along the South line of "The Woods at Oak Grove"

for 226.40 feet; thence S 01°42'53"W for 330.98 feet; thence S 29°04'58"E for 532.40 feet; thence S 14°36'44"W for 825.06 feet; thence N 56°24'26"W for 230.48 feet; thence S 89°17'51"W for 415.48 feet to the point of beginning and containing 276.735 acres more or less.

Legal Description RM-1 Residential Multi-Family Zoning District (PUD Development Area)

A tract of land situated in the Sections 35 and 36, T-18-N, R-15-E, of the Indian Base and Meridian, Wagoner County, State of Oklahoma, according to the United States Government survey thereof, being more particularly described as follows, to-wit:

Commencing at the Northeast corner of the Northeast Quarter (NE/4) of said Section 35; thence with an assumed bearing of S 01°19'11"E and along the East line of Section 35 for 495.00 feet ; thence S 88°49'27"W for 790.00 feet; thence N01°19'24"W for 495.00 feet to a point on the north line of Section 35; thence S 88°49'27"W and along the North line of said Section 35 for 158.45 feet; thence S00°26'21"E for 721.89 feet; thence S 45°46'58"W for 96.12 feet; thence S89°07'12"W for 344.76 feet; thence N83°59'17"W for 100.00 feet; thence S89°07'12"W for 119.40 feet; thence S 74°41'28"W for 48.16 feet; thence S 89°07'12"W for 341.86 feet to a point on the East Right of Way line of State Highway 51; thence S29°47'51"E and along said East Right of Way line of State Highway 51 for 326.17 feet; thence N88°48'23"E for 248.08 feet; thence S29°47'51"E and parallel to the East Right of Way line of State Highway 51 for 400.00 feet; thence S 88°48'23"W for 248.08 feet to a point on the East Right of Way line of State Highway 51; thence S 29°47'51"E and along the East Right of Way line of State Highway 51 for 1061.49 feet; thence N 88°47'08"E for 450.00 feet; thence S29°47'51"E for 330.00 feet to a point on the South line of the Northeast Quarter (NE/4) of said Section 35; thence N88°47'08"E and along the South line of said NE/4 for 522.15 feet to the Southeast Corner of said Northeast Quarter (NE/4) being the point of beginning; thence S01°19'11"E and along the East line of said Section 35, also being the West line of Section 36 for 501.83 feet; thence N89°17'51"E for 415.48 feet; thence S56°24'26"E for 230.48 feet; thence N14°36'44"E for 825.06 feet; thence N29°04'58"W for 532.40 feet; thence N01°42'53"E for 330.98 feet to a point on the South line of "The Woods at Oak Grove"; thence S81°30'28"W and along the South line of "The Woods at Oak Grove" for 375.55 feet; thence S88°40'45"W and continuing along the South line of "The Woods at Oak Grove" for 237.11 feet to a point on the West line of said Section 36; thence S 01°19'11"E and along the West line of said Section 36 for 909.96 feet to the point of beginning and containing 23.3 acres more or less.

SECTION 2: THAT ALL ORDINANCES OR PARTS OF ORDINANCES IN CONFLICT HEREWITH BE AND THE SAME ARE HEREBY EXPRESSLY REPEALED.

SECTION 3: THAT BECAUSE THE REZONING HEREBY ENACTED IS ESSENTIAL TO THE PROPER AND ORDERLY GROWTH OF THE CITY OF COWETA AN EMERGENCY EXISTS FOR THE PRESERVATION OF PUBLIC HEALTH, PEACE AND SAFETY AND BY REASON WHEREOF, THIS ORDINANCE SHALL TAKE EFFECT IMMEDIATELY UPON ITS PASSAGE.

PASSED AND APPROVED WITH THE EMERGENCY CLAUSE RULED ON SEPARATELY THIS 3rd day of March, 2014.

ROBERT MORTON, MAYOR

ATTEST

JOYCE TERRY, CITY CLERK

CITY OF COWETA
SEAL
WAGONER COUNTY OKLAHOMA

APPROVED AS TO FORM:

DAVID WEATHERFORD, CITY ATTORNEY

CITY OF Coweta
POST OFFICE BOX 850 • COWETA, OKLAHOMA 74429 • PH. (918) 486-2189 • FAX (918) 486-5366 • www.cityofcoweta-ok.gov

Memorandum

To: Planning Commission
From: Tom E Young Jr, City Planner
Re: Final Plat Stonebrook
Date: 06-24-2019

BACKGROUND

Discuss and consider possible action, including approval, approval with conditions, or denial of a request by H2 Property Investments, Developer; Engineer/Surveyor: Cook & Associates Engineering, Inc., for Final Plat approval of Stonebrook, a subdivision of approximately 4.848 acres more or less with 24 lots. Located on the corner of East 151st Street South and 285th East Avenue, in Section 13, Township 17 North, Range 15 East, of the Indian Base and Meridian, Wagoner County, State of Oklahoma. This land is zoned RS-3 (Residential Single Family).

Utilities/Site Area: The 4.848 acre more or less, subdivision is proposed to be served by City Water and City Sewer with the Developer extension of the utility lines. Windstream, ONG, AEP and Cox have all been notified and a No Meet, Technical Advisory Committee meeting was held on June 13, 2019 Additional utility easements will need to be provided in order to meet the requirement of these utilities, the Engineer/Developer have been informed as to what is needed to satisfy said requirements.

STAFF RECOMMENDATION

The Planning Commission can approve, conditionally approve, or disapprove the final plat. If the final plat is approved with conditions, the Planning Commission may require the subdivider to submit a revised final plat. The subdivider shall be advised of any amendments required by the Planning Commission to comply with these regulations. If the final plat is disapproved, the reasons for that action shall be stated.

Staff recommends approval of the Final Plat, Stonebrook with the condition that the developer meet the comments from the Technical Advisory Committee and the City Engineer.

ATTACHMENTS

1. Stonebrook, for Final Plat

FINAL P L A T

STONEBROOK

AN ADDITION
TO THE CITY OF COWETA IN SECTION 13, TOWNSHIP 17 NORTH, RANGE 15 EAST
OF THE INDIAN BASE AND MERIDIAN, WAGONER COUNTY, STATE OF OKLAHOMA

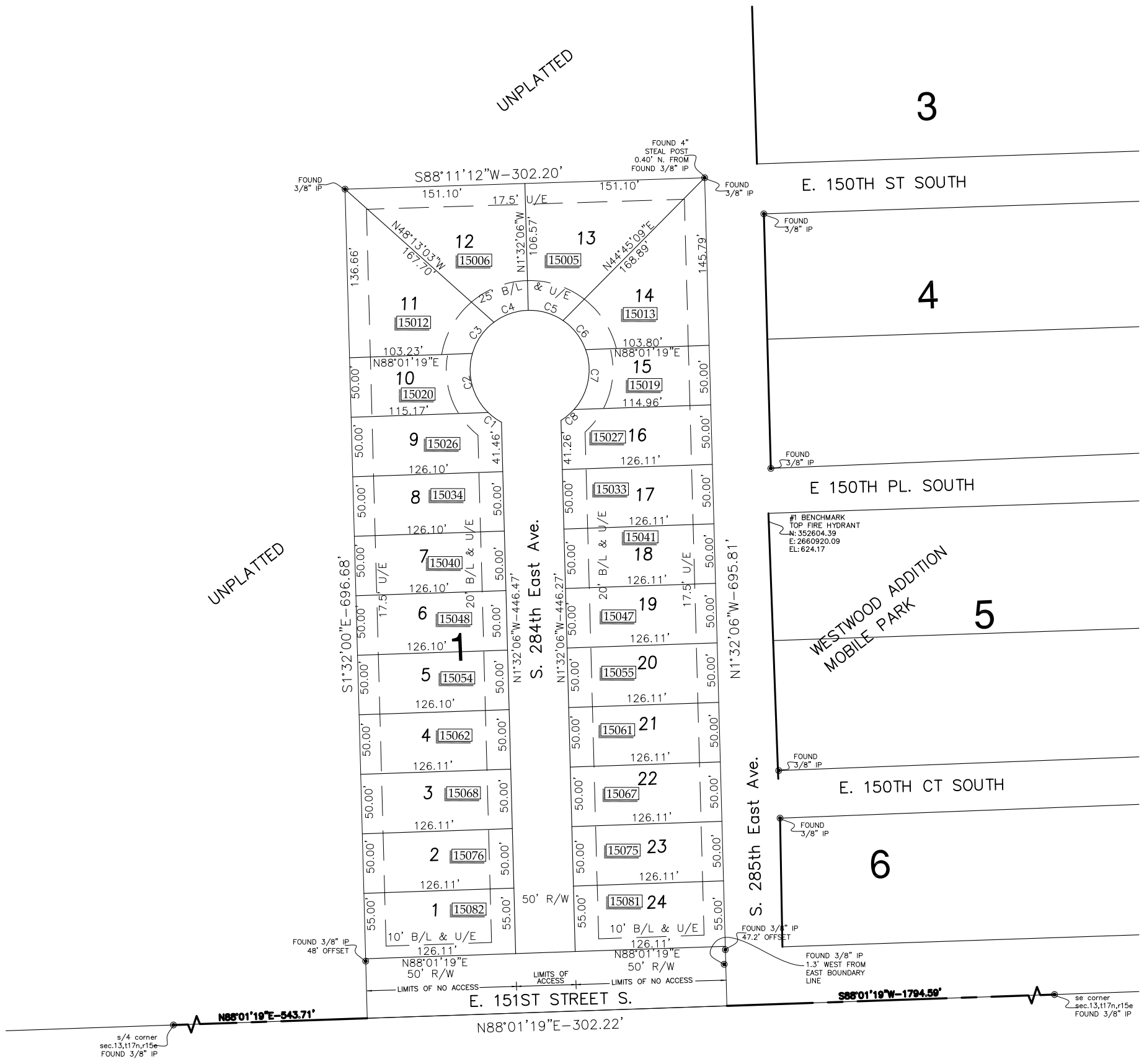

Project Data

OWNER
DAN HOLCOMB
219 NORTH ARMSTRONG
BIXBY, OKLAHOMA 74008
918.955.1555

ENGINEER/SURVEYOR
COOK & ASSOCIATES ENGINEERING, INC.
1486 EAST POPLAR
FORT GIBSON, OK 74434
918.478.9442 (VOICE) 918.478.9488 (FAX)
CA#4479 EXPIRES JUNE 30, 2020

NOTE: THE PLAT IS BASED ON THE ALTA SURVEY PERFORMED BY:
HEARTLAND SURVEYING & MAPPING LLC
600 EMPORIA ST. STE "C"
MUSKOGEE, OK 74401
918.662.7796

MUNICIPAL AUTHORITY
CITY OF COWETA
310 SOUTH BROADWAY
COWETA, OK 74429
918.486.2189

MONUMENTATION
A 3/8" X 18" DEFORMED BAR WITH A PLASTIC CAP STAMPED "CA4479" TO BE SET AT ALL PLAT BOUNDARY CORNERS, PRIOR TO RECORDATION UNLESS NOTED OTHERWISE.

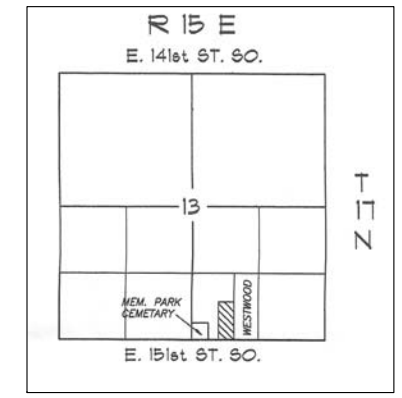

SUBDIVISION CONTAINS TWENTY-FOUR (24) LOTS IN ONE (1) BLOCK

50' 25' 0 50' 100'

Legend

B/L .....BUILDING LINE
FL/E.....LANDSCAPE EASEMENT
LNA .....LIMITS OF NO ACCESS
U/E .....UTILITY EASEMENT
1517 .....HOUSE ADDRESS
R/A .....RESTRICTED ACCESS

HORIZONTAL DATUM IS BASED ON NAD 83(93) OKLAHOMA STATE PLANE COORDINATE SYSTEM.

CURVE TABLE

CURVE NO.	LENGTH (FT.)	RADIUS (FT.)	DELTA
C1	13.86	50.00	15°52'58"
C2	53.89	50.00	61°45'19"
C3	32.50	50.00	37°14'36"
C4	31.00	50.00	35°31'28"
C5	31.00	50.00	35°31'28"
C6	31.39	50.00	35°58'17"
C7	53.89	50.00	61°45'19"
C8	14.27	50.00	16°21'10"

Backflow Preventer Valve Table

Block	Lot	Pad Elevation	Finish Floor Elevation	Upstream Manhole	Top of Rim Elevation	BFP Required
1	1	633.50	634.83	A3	634.80	YES
1	2	633.50	634.83	A3	634.80	YES
1	3	633.50	634.83	A3	634.80	YES
1	4	633.50	634.83	A3	634.80	YES
1	5	633.50	634.83	A3	634.80	YES
1	6	633.50	634.83	A3	634.80	YES
1	7	633.50	634.83	A4	636.50	YES
1	8	633.50	634.83	A4	636.50	YES
1	9	633.50	634.83	A4	636.50	YES
1	10	634.50	635.83	A4	636.50	YES
1	11	634.50	635.83	A4	636.50	YES
1	12	634.50	635.83	B4	632.10	–
1	13	629.50	630.83	B4	632.10	YES
1	14	627.50	628.83	B3	632.00	YES
1	15	627.50	628.83	B2	626.40	–
1	16	626.50	627.83	B2	626.40	–
1	17	626.50	627.83	B2	626.40	–
1	18	626.50	627.83	B2	626.40	–
1	19	626.50	627.83	B1	624.30	–
1	20	627.50	628.83	B1	624.30	–
1	21	627.50	628.83	B1	624.30	–
1	22	627.50	628.83	B1	624.30	–
1	23	627.50	628.83	B1	624.30	–
1	24	627.50	628.83	B1	624.30	–

IF THE ACTUAL FINISH FLOOR ELEVATION IS LOWER THAN ONE (1) FOOT ABOVE THE TOP OF RIM ELEVATION OF THE UPSTREAM MANHOLE, IT SHALL BE THE BUILDER'S RESPONSIBILITY TO INSTALL A BACKFLOW PREVENTER VALVE NEAR THE BUILDING

STONEBROOK

STONEBROOK
DEED OF DEDICATION AND RESTRICTIVE COVENANTS

DECLARATION OF COVENANTS, CONDITIONS AND RESTRICTIONS OF STONEBROOK

KNOW ALL MEN BY THESE PRESENTS: THAT H2 INVESTMENT PROPERTIES, LLC (THE 'OWNER/DEVELOPER') IS THE RECORD OWNER OF THE FOLLOWING DESCRIBED REAL PROPERTY, TO-WIT:

A TRACT OF LAND LYING IN THE SOUTHWEST QUARTER (SW/4) OF THE SOUTHEAST QUARTER (SE/4) OF SECTION THIRTEEN (13), TOWNSHIP SEVENTEEN NORTH (T-17-N), RANGE FIFTEEN EAST (R-15-E) OF THE INDIAN BASE AND MERIDIAN (I.B.M.), WAGONER COUNTY, STATE OF OKLAHOMA ACCORDING TO THE GOVERNMENT SURVEY THEREOF, BEING MORE PARTICULARLY DESCRIBED AS FOLLOWS:

THE WEST 302.3 FEET OF THE EAST 781.3 FEET OF THE SOUTH 698.64 FEET OF THE SOUTHWEST QUARTER OF THE SOUTHEAST QUARTER (SW/4 SE/4) OF SECTION THIRTEEN (13), TOWNSHIP SEVENTEEN NORTH (T-17-N), RANGE FIFTEEN EAST (R-15-E) OF THE INDIAN BASE AND MERIDIAN (I.B.M.), WAGONER COUNTY, STATE OF OKLAHOMA, CONTAINING 4.83 ACRES MORE OR LESS

AND HEREBY CERTIFY THAT THEY HAVE CAUSED THE SAME TO BE SURVEYED, STAKED AND PLATTED IN CONFORMITY TO THE ATTACHED PLAT, WHICH IS HEREBY ACCEPTED AS THE PLAT OF THE ABOVE DESCRIBED LAND, UNDER THE NAME OF "STONEBROOK", AN ADDITION TO THE CITY OF COWETA, WAGONER COUNTY, OKLAHOMA, (THE 'SUBDIVISION').

SECTION I. STREETS, EASEMENTS AND UTILITIES

1.1 PUBLIC STREETS AND GENERAL UTILITY EASEMENTS:

THE OWNER/DEVELOPER DOES HEREBY DEDICATE FOR THE PUBLIC USE THE STREETS, AS DESIGNATED ON THE ACCOMPANYING PLAT, AND DOES FURTHER DEDICATE FOR THE PUBLIC USE THE UTILITY EASEMENTS AS DESIGNATED ON THE ACCOMPANYING PLAT FOR THE PURPOSES OF CONSTRUCTING, MAINTAINING, OPERATING, REPAIRING AND/OR REMOVING ANY AND ALL PUBLIC UTILITIES INCLUDING STORM SEWERS, SANITARY SEWERS, TELEPHONE AND COMMUNICATION LINES, ELECTRIC POWER LINES AND TRANSFORMERS, GAS LINES, WATER LINES AND CABLE TELEVISION LINES, TOGETHER WITH ALL FITTINGS, INCLUDING THE POLES, WIRES, CONDUITS PIPES, VALVES, METERS AND EQUIPMENT FOR EACH OF SUCH FACILITIES AND ANY OTHER APPURTENANCES THERETO WITH THE RIGHTS OF INGRESS AND EGRESS TO AND UPON SAID UTILITIES, EASEMENTS AND RIGHTS-OF-WAY FOR THE USES AND PURPOSES AFORESAID. NO BUILDING, STRUCTURE OR OTHER ABOVE OR BELOW GROUND OBSTRUCTION WILL BE PLACED, ERECTED, INSTALLED OR PERMITTED UPON THE EASEMENTS OR RIGHTS-OF-WAY AS SHOWN;

PROVIDED, HOWEVER, THAT THE OWNER/DEVELOPER HEREBY RESERVES THE RIGHT TO CONSTRUCT, MAINTAIN, OPERATE, LAY AND RELAY WATER LINES AND SEWER LINES TOGETHER WITH THE RIGHT OF INGRESS AND EGRESS FOR SUCH CONSTRUCTION, MAINTENANCE, OPERATION, LAYING AND RELAYING OVER ACROSS AND ALONG ALL OF THE UTILITY EASEMENTS SHOWN IN SAID PLAT FOR THE PURPOSE OF FURNISHING WATER AND/OR SEWER SERVICES TO THE AREA INCLUDED IN SAID PLAT. THE OWNER OF EACH LOT SHALL BE RESPONSIBLE FOR THE REPAIR AND REPLACEMENT OF ANY LANDSCAPING AND PAVING LOCATED WITHIN THE UTILITY EASEMENTS IN THE EVENT IT IS NECESSARY TO REPAIR ANY UNDERGROUND WATER OR SEWER MAINS, ELECTRIC, NATURAL GAS, COMMUNICATION OR TELEPHONE SERVICE.

1.2 ELECTRIC, GAS AND COMMUNICATION SERVICE:

(A) OVERHEAD LINES FOR THE SUPPLY OF ELECTRIC OR COMMUNICATION SERVICES MAY BE LOCATED ALONG THE SOUTH BOUNDARY OF THE SUBDIVISION (ALONG E. 151ST SOUTH).

(B) STREET LIGHT POLES OR STANDARDS SHALL BE SERVED BY UNDERGROUND CABLE AND ELSEWHERE THROUGHOUT THE SUBDIVISION, ALL SUPPLY LINES SHALL BE UNDERGROUND IN THE EASEMENT WAYS RESERVED FOR GENERAL UTILITY SERVICES SHOWN ON THE ATTACHED PLOT. SERVICE PEDESTALS AND TRANSFORMERS, AS SOURCES OF SUPPLY AT SECONDARY VOLTAGES AND COMMUNICATION PEDESTALS, MAY ALSO BE LOCATED IN SAID EASEMENT WAYS.

(C) UNDERGROUND SERVICE CABLES AND GAS LINES TO ALL HOUSES WHICH MAY BE LOCATED ON ALL LOTS IN THE SUBDIVISION MAY BE RAN FROM THE NEAREST SERVICE

PEDESTAL, TRANSFORMER OR GAS MAIN TO THE POINT OF USAGE DETERMINED BY THE LOCATION AND CONSTRUCTION OF SUCH HOUSE AS MAY BE LOCATED UPON EACH SAID LOT; PROVIDED THAT UPON THE INSTALLATION OF SUCH A SERVICE CABLE OR GAS LINE TO A PARTICULAR HOUSE, THE SUPPLIER OF ELECTRIC, COMMUNICATION OR GAS SERVICE SHALL THEREAFTER BE DEEMED TO HAVE A DEFINITIVE, PERMANENT AND EFFECTIVE RIGHT-OF-WAY EASEMENT ON SAID LOT COVERING A FIVE FOOT (5') STRIP EXTENDING 2.5 FEET ON EACH SIDE OF SUCH SERVICE CABLE OR GAS LINE EXTENDING FROM THE SERVICE PEDESTAL, TRANSFORMER OR GAS MAIN TO THE SERVICE ENTRANCE ON SAID HOUSE.

(D) THE SUPPLIER OF ELECTRIC, COMMUNICATION OR GAS SERVICE, THROUGH THEIR PROPER AGENTS AND EMPLOYEES, SHALL AT ALL TIMES HAVE RIGHT OF ACCESS TO ALL SUCH EASEMENT WAYS SHOWN ON SAID PLAT OR PROVIDED FOR IN THIS DEED OF DEDICATION FOR THE PURPOSE OF INSTALLING, MAINTAINING, REMOVING OR REPLACING ANY PORTION OF SAID UNDERGROUND ELECTRIC, COMMUNICATION OR GAS FACILITIES SO INSTALLED BY THEM.

(E) THE OWNER OF EACH LOT SHALL BE RESPONSIBLE FOR THE PROTECTION OF THE UNDERGROUND ELECTRIC. COMMUNICATION OR GAS FACILITIES LOCATED ON HIS PROPERTY AND SHALL PREVENT THE ALTERATION OF GRADE OR ANY CONSTRUCTION ACTIVITY WHICH MAY INTERFERE WITH SAID ELECTRIC, COMMUNICATION OR GAS FACILITIES. THE COMPANIES WILL BE RESPONSIBLE FOR ORDINARY MAINTENANCE OF UNDERGROUND ELECTRIC, COMMUNICATION OR GAS FACILITIES BUT THE OWNER WILL PAY FOR DAMAGE OR RELOCATION OF SUCH FACILITIES CAUSED OR NECESSITATED BY ACTS OF THE OWNER, HIS AGENTS OR CONTRACTORS.

(F) THE FOREGOING COVENANTS CONCERNING UNDERGROUND ELECTRIC, COMMUNICATION AND GAS FACILITIES SHALL BE ENFORCEABLE BY THE SUPPLIER OF ELECTRIC, COMMUNICATION AND GAS SERVICE, AND THE OWNER OF EACH LOT AGREES TO BE BOUND HEREBY.

1.3 PUBLIC UTILITY SERVICE:

(A) THE OWNER OF EACH LOT SHALL BE RESPONSIBLE FOR THE PROTECTION OF THE PUBLIC UTILITY MAINS LOCATED ON OR IN THEIR LOT.

(B) WITHIN THE DEPICTED UTILITY EASEMENT AREAS, IF THE GROUND ELEVATIONS ARE ALTERED FROM THE CONTOURS EXISTING UPON THE COMPLETION OF THE INSTALLATION OF PUBLIC UTILITY MAINS, ALL GROUND LEVEL APERTURES INCLUDING: VALVE BOXES, FIRE HYDRANTS AND MANHOLES WILL BE ADJUSTED TO THE NEW GRADE BY THE OWNER OR AT THE OWNER'S EXPENSE.

(C) THE CITY OF COWETA OR ITS SUCCESSORS WILL BE RESPONSIBLE FOR ORDINARY MAINTENANCE OF PUBLIC UTILITY MAINS, BUT THE OWNER WILL PAY FOR DAMAGE OR RELOCATION OF SUCH FACILITIES CAUSED OR NECESSITATED BY ACTS OF THE OWNER, HIS AGENTS OR CONTRACTORS.

(D) THE CITY OF COWETA OR ITS SUCCESSORS, THROUGH ITS PROPER AGENTS AND EMPLOYEES, SHALL AT ALL TIMES HAVE RIGHT OF ACCESS WITH THEIR EQUIPMENT TO ALL SUCH EASEMENT WAYS SHOWN ON SAID PLAT OR PROVIDED FOR IN THIS DEED OF DEDICATION FOR THE PURPOSE OF INSTALLING, MAINTAINING, REMOVING OR REPLACING ANY PORTION OF SAID UNDERGROUND PUBLIC FACILITIES.

(E) THE OWNER OF THE LOT SHALL BE RESPONSIBLE FOR THE REPAIR OF DAMAGE TO LANDSCAPING AND PAVING OCCASIONED BY NECESSARY MAINTENANCE OR REPAIR OF THE PUBLIC UTILITY FACILITIES WITHIN THE EASEMENT AREAS; PROVIDED, HOWEVER, THE CITY OF COWETA SHALL USE REASONABLE CARE IN THE PERFORMANCE OF SUCH ACTIVITIES.

(F) THE FOREGOING COVENANTS SET FORTH IN THIS PARAGRAPH 1.3 SHALL BE ENFORCEABLE BY THE CITY OF COWETA OR ITS SUCCESSORS, AND THE OWNER OF EACH LOT AGREES TO BE BOUND HEREBY.

1.5 RESERVE/LANDSCAPE EASEMENT:

THE OWNER/DEVELOPER HEREIN ESTABLISHES FOR THE BENEFIT OF THE PROPERTY OWNERS ASSOCATION, A PERPETUAL EASEMENT, AS DEPICTED ON THE ACCOMPANYING PLAT AS RESERVE/LANDSCAPE EASEMENT FOR THE PURPOSES OF THE ERECTION AND MAINTENANCE OF DECORATIVE FENCING AND WALLS, LANDSCAPING AND IRRIGATION SYSTEM. MAINTENANCE OF SUCH FACILITIES SHALL BE THE OBLIGATION OF THE PROPERTY OWNERS ASSOCIATION. THE CITY OF COWETA AND THE PRIVATE UTILITY COMPANIES SHALL HAVE THE RIGHT TO ESTABLISH AND MAINTAIN UTILITIES ON ALL RESERVE/LANDSCAPE EASEMENTS.

THE CITY OF COWETA MAY, AT ANY TIME, REMOVE SUCH LANDSCAPE FOR THE BETTERMENT OF THE PUBLIC INTEREST.

SECTION III. PRIVATE BUILDING AND USE RESTRICTIONS

WHEREAS, THE OWNER/DEVELOPER DESIRES TO ESTABLISH RESTRICTIONS FOR THE PURPOSE OF PROVIDING FOR AN ORDERLY DEVELOPMENT AND TO INSURE ADEQUATE RESTRICTIONS FOR THE MUTUAL BENEFIT OF THE OWNER/DEVELOPER ITS SUCCESSORS AND ASSIGNS.

WHEREFORE, THE OWNER/DEVELOPER DOES HEREBY IMPOSE THE FOLLOWING RESTRICTIONS AND COVENANTS WHICH SHALL BE COVENANTS RUNNING WITH THE LAND, AND SHALL BE BINDING UPON THE OWNER/DEVELOPER, ITS SUCCESSORS AND ASSIGNS:

3.1 ARCHITECTURAL CONTROL COMMITTEE – PLAN REVIEW:

(A) NO BUILDING, FENCE OR WALL SHALL BE ERECTED, PLACED OR ALTERED ON ANY LOT IN THIS SUBDIVISION UNTIL THE BUILDING PLANS, SPECIFICATIONS, DRAINAGE PLANS, GRADING PLANS, EXTERIOR COLOR SCHEME, AND MATERIAL THEREOF, AND PLOT PLAN WHICH SHOWS THE LOCATION AND FACING OF SUCH BUILDING HAS BEEN APPROVED IN WRITING BY A MAJORITY OF AN ARCHITECTURAL CONTROL COMMITTEE COMPOSED OF DAN HOLCOMB OR DULY AUTHORIZED REPRESENTATIVE(S), ASSIGN(S) OR SUCCESSORS. IN THE EVENT OF THE DEATH OR RESIGNATION OF ANY MEMBER OF THE ABOVE NAMED COMMITEE, THE REMAINING MEMBER(S) SHALL HAVE FULL AUTHORITY TO APPROVE OR DISAPPROVE SUCH PLANS, SPECIFICATIONS, COLOR SCHEMES, MATERIALS AND PLOT PLAN, OR TO DESIGNATE A REPRESENTATIVE(S) WITH THE LIKE AUTHORITY, AND SAID REMAINING MEMBER(S) SHALL HAVE AUTHORITY TO FILL ANY VACANCY OR VACANCIES CREATED BY THE DEATH OR RESIGNATION OF ANY OF THE AFORESAID MEMBERS AND SAID NEWLY APPOINTED MEMBER SHALL HAVE THE SAME AUTHORITY HEREUNDER AS THEIR PREDECESSORS, AS ABOVE SET FORTH. IN THE EVENT THE ARCHITECTURAL CONTROL COMMITTEE FAILS TO APPROVE OR DISAPPROVE ANY SUCH PLANS, SPECIFICATIONS, COLOR SCHEME, MATERIALS AND PLOT PLANS SUBMITTED TO IT AS HEREIN REQUIRED WITHIN THIRTY (30) DAYS AFTER SUCH SUBMISSION, OR IN THE EVENT NO SUIT TO ENJOIN THE ERECTION OF SUCH BUILDING OR THE MAKING OF SUCH ALTERATION HAS BEEN COMMENCED PRIOR TO THE COMPLETION THEREOF, SUCH APPROVAL SHALL NOT BE REQUIRED AND THIS COVENANT SHALL BE DEEMED TO HAVE BEEN FULLY COMPLIED WITH.

(B) THE ARCHITECTURAL CONTROL COMMITTEE'S PURPOSE IS TO PROMOTE GOOD DESIGN AND COMPATIBILITY WITHIN THE SUBDIVISION AND IN ITS REVIEW OF PLANS OR DETERMINATION OF ANY WAIVER AS HEREINAFTER AUTHORIZED, MAY TAKE INTO CONSIDERATION THE NATURE AND CHARACTER OF THE PROPOSED BUILDING OR STRUCTURE, THE MATERIALS OF WHICH IT IS TO BE BUILT, THE AVAILABILITY OF ALTERNATIVE MATERIALS, THE SITE UPON WHICH IT IS PROPOSED TO BE ERECTED AND THE HARMONY THEREOF WITH THE SURROUNDING AREA. THE ARCHITECTURAL CONTROL COMMITEE SHALL NOT BE LIABLE FOR ANY APPROVED, DISAPPROVED OR FAILURE TO APPROVE HEREUNDER AND ITS APPROVAL OF BUILDING PLANS SHALL NOT CONSTITUTE A WARRANTY OR RESPONSIBILITY FOR BUILDING METHODS, MATERIALS, PROCEDURES, STRUCTURAL DESIGN, GRADING OR DRAINAGE, OR CODE VIOLATIONS. THE APPROVAL, DISAPPROVAL OR FAILURE TO APPROVE OF ANY BUILDING PLANS SHALL NOT BE DEEMED A WAIVER OF ANY RESTRICTION, UNLESS THE ARCHITECTURAL CONTROL COMMITEE IS HEREINAFTER AUTHORIZED TO GRANT THE PARTICULAR WAIVER IN WRITING. NOTHING HEREIN CONTAINED SHALL IN ANY WAY BE DEEMED TO PREVENT ANY OF THE OWNERS OF PROPERTY IN THIS SUBDIVISION FOR MAINTAINING ANY LEGAL ACTION RELATING TO IMPROVEMENT WITHIN THIS SUBDIVISION WHICH THEY WOULD OTHERWISE BE ENTITLED TO MAINTAIN.

(C) THE POWERS AND DUTIES OF THE COMMITEE OR ITS DESIGNATED REPRESENTATIVE SHALL CEASE WHEN ONE HUNDRED PERCENT (100%) OF THE LOTS HAVE BEEN CLOSED. THEREAFTER, THE POWERS AND DUTIES OF THE COMMITEE SHALL BE EXERCISED BY THE PROPERTY OWNERS ASSOCIATION HEREAFTER PROVIDED FOR.

3.2 FLOOR AREA OF DWELLINGS:

(A) SINGLE-STORY. A SINGLE-STORY DWELLING SHALL HAVE AT LEAST 1,100 SQUARE FEET OF FINISHED HEATED LIVING AREA.

(B) 1100 SQUARE FOOT MINIMUM ON LOWER LEVEL. TWO-STORY AND STORY-AND-A-HALF. IF A DWELLING HAS TWO LEVELS OR STORIES IMMEDIATELY ABOVE AND BELOW EACH OTHER MEASURED VERTICALLY AND ALL SUCH LEVELS OR STORIES ARE ABOVE THE FINISHED EXTERIOR GRADE OF SUCH DWELLING, THEN SUCH DWELLING SHALL HAVE A TOTAL OF THE VARIOUS LEVELS OR STORIES OF AT LEAST 1,100 SQUARE FEET OF FINISHED HEATED LIVING AREA.

(C) COMPUTATION OF LIVING AREA. THE COMPUTATION OF LIVING AREA SHALL NOT INCLUDE ANY BASEMENT OR ATTIC AREA USED FOR STORAGE. ALL LIVING AREA MEASUREMENTS SHALL BE TAKEN HORIZONTALLY AT THE TOP PLATE LEVEL TO THE FACE OF THE OUTSIDE WALL. REQUIRED LIVING AREA MUST AVERAGE AT LEAST SEVEN FEET SIX INCHES (7'-6") IN HEIGHT, EXCEPT THAT IN THE COMPUTATION OF SECOND OR UPPER STORY LIVING AREA, THE HEIGHT SHALL BE SEVEN FEET SIX INCHES (7'-6") FOR AT LEAST ONE-HALF OF THE REQUIRED LIVING AREA, AND ANY AREA OF LESS THAN FIVE FEET (5') IN HEIGHT SHALL BE EXCLUDED.

(D) WAVER: THE ARCHITECTURAL CONTROL COMMITTEE MAY WAVE, IN THE PARTICULAR INSTANCE, THE FLOOR AREA REQUIREMENTS SET OUT IN PARAGRAPHS A AND B OF THIS SECTION.

3.3 GARAGE:

EACH DWELLING SHALL HAVE AN ENCLOSED GARAGE FOR AT LEAST TWO (2) AUTOMOBILES.

3.4 BUILDING MATERIAL REQUIREMENTS:

(A) STEM WALLS. ALL EXPOSED FACES OF FOUNDATION OR STEM WALLS SHALL BE OF

BRICK OR STONE OR STUCCO. NO CONCRETE BLOCKS, POURED CONCRETE OR ANY OTHER FOUNDATION WILL BE EXPOSED. NO CONCRETE FACE OF STEM WALLS WILL BE EXPOSED.

(B) ROOFING. NO BUILDING SHALL HAVE A ROOF PITCH OF LESS THAN 6/12 EXCEPT THAT IT MAY HAVE A FLAT ROOF EQUAL TO NO MORE THAN TWENTY PER CENT (20%) OF THE AREA COVERED BY ALL ROOF SURFACES, SUBJECT TO APPROVAL OF OWNER. WOOD GRAINED COMPOSITION ROOFING MATERIAL HAVING A THIRTY (30) YEAR OR MORE RATING (SUCH AS "TAMKO HERITAGE 30 WEATHERED WOOD") AND SLATE WITH A WEATHERED WOOD COLOR AND APPEARANCE, SHALL BE USED ON ALL HOMES IN THE SUBDIVISION. THE COMMITEE MAY, BUT SHALL NOT BE OBLIGATED TO WAVE THIS RESTRICTION. PROVIDED, HOWEVER, SUCH WAIVER TO BE EFFECTIVE MUST BE IN WRITING, DATED AND SIGNED BY THE COMMITTEE.

(C) NOT USED

(D) WINDOWS. ALL DWELLINGS WITH WINDOWS OTHER THAN WOOD WILL BE ALL VINYL WINDOWS. FRAMES WILL BE IN COLOR HARMONY WITH THE EXTERIOR COLOR AND TEXTURE OF THE RESIDENCE. NO UNPAINTED ALUMINUM WILL BE PERMITTED FOR WINDOW FRAMING. WOOD FRAMES WILL BE POINTED, SEALED OR STAINED.

(E) CHIMNEYS. ALL CHIMNEYS VISIBLE FROM THE STREET SHALL BE SIDING. CHIMNEY CAPS SHALL BE RECTANGULAR AND SHALL BE A DARK EARTH TONE.

(F) MAIL BOXES. ALL MAIL BOXES VISIBLE FROM THE STREET SHALL BE STANDARD MAIL BOXES.

(G) WAVER. THE ARCHITECTURAL CONTROL COMMITTEE MAY WAVE, IN A PARTICULAR INSTANCE, THE BUILDING MATERIAL REQUIREMENTS SET OUT IN THIS SUBSECTION; PROVIDED, SUCH WAVER TO BE EFFECTIVE MUST BE IN WRITING, DATED AND SIGNED BY A MAJORITY OF SUCH COMMITTEE.

3.5 COMMERCIAL STRUCTURES:

NO BUILDING OR STRUCTURE SHALL BE PLACED, ERECTED OR USED FOR BUSINESS, PROFESSIONAL, TRADE OR COMMERCIAL PURPOSES ON ANY PORTION OF ANY LOT.

3.6 NOXIOUS ACTIVITY:

NO NOXIOUS OR OFFENSIVE TRADE OR ACTIVITY SHALL BE CARRIED ON UPON ANY LOT, NOR SHALL ANY TRASH OR OTHER REFUSE BE THROWN, PLACED OR DUMPED UPON ANY VACANT LOT, NOR SHALL ANYTHING BE DONE WHICH MAY BE OR BECOME AN ANNOYANCE OR NUISANCE TO THE NEIGHBORHOOD.

3.7 SIGNS PROHIBITED:

THE CONSTRUCTION OR MAINTENANCE OF ADVERTISING SIGNS, OR OTHER ADVERTISING STRUCTURES ON ANY LOT IS PROHIBITED, EXCEPT AS FOLLOWS:

(A) SIGNS ADVERTISING THE SALE OR RENTAL OF A PROPERTY ARE PERMITTED, PROVIDED THEY DO NOT EXCEED NINE (9) SQUARE FEET IN DISPLAY SURFACE AREA.

(B) DURING THE DEVELOPMENT PERIOD OF COUNTRY MEADOWS, SIGNS ADVERTISING THE SUBDIVISION OR THE INITIAL OFFERING OF A LOT MAY BE LOCATED AT THE ENTRANCES TO COUNTRY MEADOWS.

(C) PERMANENT SIGNS IDENTIFYING THE SUBDIVISION MAY BE LOCATED AT THE ENTRANCES TO COUNTRY MEADOWS IN THE PROVIDED RESERVES OR SIGN EASEMENTS AS SHOWN ON THE PLAT.

3.8 EXISTING BUILDING:

NO EXISTING BUILDING OF ANY SORT MAY BE MOVED ONTO OR PLACED ON ANY LOT.

3.9 TEMPORARY STRUCTURES AND OUTBUILDINGS:

(A) NO TRAILER, TENT, GARAGE, BARN, OUTBUILDING NOR ANY STRUCTURE EXCEPT THAT ATTACHED TO THE HOUSE IS ALLOWED AND MUST BE COMPATIBLE WITH THE HOUSE ARCHITECTURE.

3.10 VEHICLE STORAGE AND PARKING:

NO INOPERATIVE VEHICLE SHALL BE STORED ON ANY LOT EXCEPT WITHIN AN ENCLOSED GARAGE. NO BOATS, BOAT TRAILERS, PERSONAL WATER CRAFT, MOTORCYCLES, HOUSE TRAILERS, CAMPERS, MOTOR HOMES, PANEL TRUCKS, CAMPER TRAILERS, RECREATIONAL VEHICLES OR SIMILAR VEHICLE SHALL BE LOCATED, PARKED OR STORED WITHIN A SIDE, FRONT OR REAR YARD, AND IF NOT LOCATED WITHIN AN ENCLOSED GARAGE, SHALL BE SCREENED SUFFICENTLY TO PREVENT ANY VIEW THEREOF FROM ANY STREET OR NEIGHBORING LOT WITHIN ABUTTING SUBDIVISIONS.

3.11 ANTENNAS; TRAILERS AND CAMPERS:

NO FACILITIES, INCLUDING POLES AND WIRES, FOR THE TRANSMISSION OR GENERATION OF ELECTRICITY, TELEPHONE MESSAGES AND THE LIKE, SHALL BE PLACED OR MAINTAINED ABOVE THE SURFACE OF THE GROUND ON ANY LOT AND NO EXTERNAL OR OUTSIDE ANTENNAS OR SATELLITE DISH SHALL BE LOCATED UPON ANY LOT, EXCEPT A RECEIVER DISH NOT TO EXCEED 20-INCHES IN DIAMETER WHICH IS ATTACHED TO THE DWELLING AND NOT VISIBLE FROM THE PUBLIC STREET. NO ACTIVITY SHALL BE CONDUCTED ON ANY LOT WHICH INTERFERES WITH TELEVISION OR RADIO RECEPTION ON ANY OTHER LOT.

3.12 HOME OPERATED BUSINESSES:

NO HOME OPERATED BUSINESSES SHALL BE ALLOWED.

3.13 INTERIOR FENCES OR WALLS:

INTERIOR FENCES SITUATED ALONG THE SIDES AND REAR LOT LINES SHALL COMPLY WITH THE FOLLOWING:

(A) NO SUCH FENCE SHALL EXCEED FOUR FEET (4') IN HEIGHT. NO FENCE SHALL BE ERECTED OR MAINTAINED NEARER TO THE STREETS WITHIN THE SUBDIVISION THAN THE BUILDING SETBACK LINES DEPICTED ON THE PLAT EXCEPT FOR DECORATIVE FENCES SET FORTH IN PARAGRAPH (B) IMMEDIATELY BELOW. EXCEPT AS SET FORTH IN PARAGRAPHS (B) AND (C) IMMEDIATELY BELOW, ALL FOUR FOOT (4') FENCES OCCURRING ON THE LOT OR PROPERTY LINES AND TYING BACK TO THE HOUSE STRUCTURE WILL BE CONSTRUCTED OF FOUR FOOT (4') BLACK VINYL-COATED CHAIN LINK WITH TREATED WOOD POSTS AND TOP RAILS.

(B) DECORATIVE FENCES OR WALLS SHALL BE PERMITTED ON THAT PORTION OF ANY LOT IN FRONT OF THE BUILDING SETBACK LINE. DECORATIVE FENCING OR WALLS SHALL NOT EXCEED THREE FEET (3') IN HEIGHT AND SHALL BE OF THE SOME DECOR, MATERIALS, (I.E., WROUGHT IRON, ETC.) AND STYLING AS USED IN THE ARCHITECTURE AND CONSTRUCTION OF THE DWELLING SITUATED ON THE LOT. NOTE: SCREENING FENCES AND BAFFLES MAY BE ERECTED UP TO SIX FEET (6') IN HEIGHT BUT MUST BE AN EXTENSION OF THE HOUSE STRUCTURE LINE FROM FRONT TO BACK AND SIDE TO SIDE AND NOT LOCATED ON THE LOT LINE, NOT TO EXCEED 3,500 SQUARE FEET.

(C) NO FENCE OR WALL SHALL BE ERECTED ON ANY LOT UNTIL THE PLANS, SPECIFICATIONS AND DESIGN THEREOF HAVE BEEN APPROVED BY THE ARCHITECTURAL CONTROL COMMITEE AS PROVIDED IN THIS SECTION ARCHITECTURAL CONTROL COMMITEE MAY WAVE IN A PARTICULAR INSTANCE THE REQUIREMENTS OR LIMITATIONS SET FORTH IN PARAGRAPHS 3.12 (A) AND 3.12 (B) OF THIS SECTION.

3.14 LANDSCAPING REQUIREMENTS:

EACH LOT OWNER SHALL COMPLETELY SOD THE YARD FROM THE REAR OF THE LOT TO THE STREET CURB AFTER COMPLETION OF CONSTRUCTION OF THE HOUSE.

SECTION IV. PROPERTY OWNERS ASSOCIATION

4.1 FORMATION OF ASSOCIATION:

THE OWNER/DEVELOPER HAS FORMED OR SHALL CAUSE TO BE FORMED STONEBROOK PROPERTY OWNERS ASSOCIATION, INC. (HEREINAFTER REFERRED TO AS THE 'ASSOCIATION'), A NON-PROFIT ENTITY ESTABLISHED PURSUANT TO THE GENERAL CORPORATION ACT OF THE STATE OF OKLAHOMA AND FORMED FOR THE GENERAL PURPOSES OF MAINTAINING THE RESERVES AND COMMON AREAS AND ENHANCING THE VALUE, DESIRABILITY AND ATTRACTIVENESS OF STONEBROOK.

4.2 MEMBERSHIP:

EVERY PERSON OR ENTITY, WHO IS A RECORD OWNER OF THE FEE INTEREST OF A LOT IN STONEBROOK, SHALL BE A MEMBER OF THE ASSOCIATION, AND MEMBERSHIP SHALL BE APPURTENANT TO AND MAY NOT BE SEPARATED FROM THE OWNERSHIP OF A LOT. THE ACCEPTANCE OF A DEED TO A LOT SHALL CONSTITUTE ACCEPTANCE OF MEMBERSHIP TO THE ASSOCIATION AS OF THE DATE OF INCORPORATION, OR AS OF THE DATE OF RECORDING OF THE DEED, WHICHEVER OCCURS LAST. THE DEVELOPERS OF STONEBROOK SHALL MAINTAIN THREE (3) VOTES PER LOT OWNED FOR ELECTION TO THE BOARD OF DIRECTORS AND FOR ANY OTHER VOTING OF THE ASSOCIATION.

4.3 COVENANT FOR ASSESSMENTS:

THE OWNERS AND EACH SUBSEQUENT OWNER OF A LOT, BY ACCEPTANCE OF A DEED THEREOF AND ON OBTAINING AN OCCUPANCY PERMIT FROM THE CITY OF COWETA, IS DEEMED TO COVENANT AND AGREE TO PAY TO THE ASSOCIATION AN ANNUAL ASSESSMENT AS ESTABLISHED BY THE BOARD OF DIRECTORS, NOT TO EXCEED $100.00 PER YEAR PER LOT OWNED; PROVIDED, HOWEVER, THE BOARD OF DIRECTORS MAY INCREASE EACH YEAR SUBSEQUENT TO THE INITIAL ASSESSMENT YEAR, THE MAXIMUM ASSESSMENT BY THE PERCENTAGE INCREASE, IF ANY, SHALL BE TEN PERCENT (10%) AS LONG AS A DEVELOPER OR HOME BUILDER IS THE OWNER OF A LOT, THEY SHALL BE EXEMPT FROM SAID ANNUAL ASSESSMENT AND/OR ASSOCIATION DUES.

4.4 CERTAIN RIGHTS OF THE ASSOCIATION:

WITHOUT LIMITATION OF SUCH OTHER POWERS AND RIGHTS AS THE ASSOCIATION MAY HAVE, THE ASSOCIATION SHALL BE DEEMED A BENEFICIARY, TO THE SAME EXTENT AS A LOT OWNER, OF THE VARIOUS COVENANTS WITHIN THIS DOCUMENT CONTAINED, AND SHALL HAVE THE RIGHT TO ENFORCE SAID COVENANTS AND AGREEMENTS.

4.6 BONDING:

IT SHALL BE REQUIRED THAT THE SECRETARY/TREASURER OF THE PROPERTY OWNERS ASSOCIATION OF STONEBROOK BE BONDED. THE ASSOCIATION WILL BE RESPONSIBLE FOR OBTAINING AND PAYING FOR SAID APPROPRIATE BONDING.

SECTION V. ENFORCEMENT, DURATION, AMENDMENT AND SEVERABILITY

5.1 ENFORCEMENT.

THE RESTRICTIONS HEREIN SET FORTH ARE COVENANTS TO RUN WITH THE LAND AND SHALL BE BINDING UPON THE OWNER/DEVELOPER, THEIR SUCCESSORS, ASSIGNS AND ALL PARTIES CLAIMING UNDER THEM, WITHIN THE PROVISIONS OF SUBSECTION 1.1, PUBLIC STREETS AND GENERAL UTILITY EASEMENTS; SUBSECTION 1.2, ELECTRIC, GAS AND COMMUNICATION SERVICE; SUBSECTION 1.3, PUBLIC UTILITY SERVICE; SUBSECTION 1.4, RESERVE/LANDSCAPE EASEMENT. THE COVENANTS WITHIN SECTION II AND SECTION III SHALL INURE TO THE BENEFIT OF OWNERS OF RESIDENTIAL LOTS WITHIN THE SUBDIVISION, AND THE PROPERTY OWNERS ASSOCIATION PROVIDED FOR IN SECTION IV. IF THE OWNER/DEVELOPER OR OWNERS OF LOTS WITHIN THE SUBDIVISION, OR THEIR SUCESSORS OR ASSIGNS SHALL VIOLATE ANY OF THE COVENANTS WITHIN SECTION III, IT SHALL BE LAWFUL FOR ANY PERSON OR PERSONS OWNING ANY LOT SITUATED WITHIN THE SUBDIVISION OR THE PROPERTY OWNERS ASSOCIATION TO MAINTAIN ANY ACTION IN LAW OR IN EQUITY AGAINST THE PERSON OR PERSONS VIOLATING OR ATTEMPTING TO VIOLATE ANY SUCH COVENANT, TO PREVENT HIM OR THEM FROM SO DOING OR TO COMPEL COMPLIANCE WITH THE COVENANTS OR TO RECOVER DAMAGES FOR SUCH VIOLATIONS.

5.2 DURATION:

THESE RESTRICTIONS SHALL REMAIN IN FULL FORCE AND EFFECT UNTIL JANUARY 1, 2029 AND SHALL AUTOMATICALLY BE CONTINUED THEREAFTER FOR SUCESSIVE PERIODS OF TEN (10) YEARS EACH UNLESS TERMINATED OR AMENDED AS HEREINAFTER PROVIDED.

5.3 AMENDMENT OR TERMINATION:

THE COVENANTS CONTAINED WITHIN SECTION I AND SECTION II MAY BE AMENDED, MODIFIED, CHANGED OR CANCELED ONLY BY A WRITTEN INSTRUMENT SIGNED AND ACKNOWLEDGED BY THE OWNERS OF MORE THAN NINETY-FIVE PERCENT (95%) OF THE LOTS WITHIN THE SUBDIVISION. APPROVED BY THE CITY OF COWETA AND THE PROVISIONS OF SUCH INSTRUMENT SHALL BE BINDING FROM AND AFTER THE DATE IT IS PROPERLY RECORDED.

5.4 SEVERABILITY

INVALIDATION OF ANY RESTRICTION SET FORTH HEREIN, OR ANY PART THEREOF, BY AN ORDER, JUDGMENT, OR DECREE OF ANY COURT, OR OTHERWISE, SHALL NOT INVALIDATE OR AFFECT ANY OF THE OTHER RESTRICTIONS OR ANY PART THEREOF AS SET FORTH HEREIN, WHICH SHALL REMAIN IN FULL FORCE AND EFFECT.

IN WITNESS WHEREOF: H2 INVESTMENT PROPERTIES, LLC, DAN HOLCOMB, AN OKLAHOMA COMPANY AS OWNER OF STONEBROOK HAS EXECUTED THIS INSTRUMENT THIS____ DAY OF____________________, 2019.

BY:____________________
DAN HOLCOMB

STATE OF OKLAHOMA)
)SS
COUNTY OF __________)

BEFORE ME, THE UNDERSIGNED, A NOTARY PUBLIC, IN AND FOR THE SAID COUNTY AND STATE, ON THIS________ DAY OF __________, 2019, PERSONALLY APPEARED DAN HOLCOMB, KNOWN AS THE IDENTICAL PERSON THEREOF TO THE FOREGOING INSTRUMENT AS ITS PRESIDENT AND ACKNOWLEDGED TO ME THAT HE AND SHE EXECUTED THE SAME AS HIS AND HER FREE AND VOLUNTARY ACT AND DEED, AND AS THE FREE AND VOLUNTARY ACT AND DEED OF SUCH COMPANIES, FOR THE USES AND PURPOSES THEREIN SET FORTH.

GIVEN UNDER MY HAND AND SEAL THE DAY AND YEAR LAST ABOVE WRITTEN.

____
NOTARY PUBLIC

MY COMMISSION EXPIRES:
____

MY COMMISSION NUMBER:
____

CERTIFICATE OF SURVEY:

WE, COOK AND ASSOCIATES ENGINEERING, AND I, DAVID L. CANTRELL, A PROFESSIONAL LAND SURVEYOR IN THE STATE OF OKLAHOMA, DO HEREBY CERTIFY THAT I HAVE CAREFULLY AND ACCURATELY SURVEYED, SUBDIVIDED, AND PLATTED THE TRACT OF LAND DESCRIBED ABOVE, AND THAT THE ACCOMPANYING PLAT DESIGNATED HEREIN AS 'STONEBROOK', A SUBDIVISION IN THE CITY OF COWETA, WAGONER COUNTY, STATE OF OKLAHOMA, IS A TRUE REPRESENTATION OF THE SURVEY MADE ON THE GROUND USING GENERALLY ACCEPTED PRACTICES AND MEETS OR EXCEEDS THE OKLAHOMA MINIMUM STANDARDS FOR THE PRACTICE OF LAND SURVEYING AS OF THIS DATE.

WITNESS MY HAND AND SEAL THIS______ DAY OF__________________, 2019.

BY____________________
DAVID CANTRELL, RLS 351

REGISTERED PROFESSIONAL LAND SURVEYOR
DAVID L. CANTRELL
L.S. 351
OKLAHOMA

STATE OF OKLAHOMA)
)SS
COUNTY OF __________)

BEFORE ME, THE UNDERSIGNED, A NOTARY PUBLIC, IN AND FOR THE SAID COUNTY AND STATE, ON THIS________ DAY OF __________, 2019, PERSONALLY APPEARED DAVID CANTRELL, KNOWN AS THE IDENTICAL PERSON.

GIVEN UNDER MY HAND AND SEAL THE DAY AND YEAR LAST ABOVE WRITTEN.

____
NOTARY PUBLIC

MY COMMISSION EXPIRES:
____

MY COMMISSION NUMBER:
____

CERTIFICATE OF COWETA PLANNING COMMISSION:

I, AS CHAIRMAN OF THE COWETA PLANNING COMMISSION, DO CERTIFY THAT THE PROPOSED SUBDIVISION "STONEBROOK" HAS BEEN PROCESSED THROUGH THE COWETA PLANNING COMMISSION WITH APPROVAL FOR ACCEPTANCE.

BY____________________
CHAIRPERSON, CHAIR, OR VICE CHAIR

CERTIFICATE OF APPROVAL:

I HEREBY CERTIFY THAT THIS PLAT WAS APPROVED BY THE COWETA CITY COUNCIL

ON:____________________.

BY____________________
MAYOR OR VICE MAYOR

THIS APPROVAL IS VOID IF THE ABOVE SIGNATURE IS NOT ENDORSED BY THE CITY CLERK.

BY____________________
CITY CLERK

CERTIFICATE OF WAGONER COUNTY TREASURER:

I DO HERE NOW STATE THAT THE TAXES HAVE BEEN PAID FOR THE YEAR 20______ AND PRIOR YEARS FOR THOSE PROPERTIES HEREIN LISTED TO BE DESIGNATED AS "STONEBROOK"

BY____________________
WAGONER COUNTY TREASURER

CERTIFICATE OF WAGONER COUNTY CLERK:

I, THE COUNTY CLERK OF WAGONER COUNTY, DO HERE NOW STATE THAT THE SUBDIVISION CALLED "STONEBROOK" HAS BEEN FILED INTO WAGONER COUNTY RECORDS.

BY____________________
WAGONER COUNTY CLERK

Development Plans

for

STONEBROOK

Part of Section 13, T-17-N, R-15-E, City of Coweta, Wagoner County, Oklahoma

Project Data

OWNER

DAN HOLCOMB
219 NORTH ARMSTRONG
BIXBY, OKLAHOMA 74008
918.955.1555

ENGINEER

COOK & ASSOCIATES ENGINEERING, INC.
1486 EAST POPLAR
FORT GIBSON, OK 74434
918.478.9442 (VOICE) 918.478.9488 (FAX)
CA#4479 EXPIRES JUNE 30, 2020

SURVEYOR

HEARTLAND SURVEYING & MAPPING LLC
600 EMPORIA ST. STE "C"
MUSKOGEE, OK 74401
918.662.7796

MUNICIPAL AUTHORITY

CITY OF COWETA
310 SOUTH BROADWAY
COWETA, OK 74429
918.486.2189

Legal Description

A tract of land situated in the Southwest Quarter (SW/4) of the Southeast Quarter (SE/4) of Section 13, T-17-N, R-15-E of the Indian Base and Meridian, Wagoner County, State of Oklahoma according to the U.S. Government Survey thereof, being more particularly described as follows, to-wit;

Commencing at the Southeast corner of the SW/4 SE/4 of said Section 13, thence S 89°43'00"W and along the south line of said Section 13 for 479.00 feet to the point of beginning; thence continuing along the south line of said Section 13 for 302.30 feet; thence N 00°00'00"E for 698.64 feet; thence N 89°43'00"E for 302.30 feet; thence S 00°00'00"W for 698.64 feet to the point of beginning and containing 4.848 acres more or less.

BENCH MARK:
FLOWLINE OF EXISTING SANITARY SEWER MANHOLE, LOCATED IN LOT 2, BLOCK 6 WESTWOOD ADDITION
ELEVATION: 607.69 USC & GS DATUM

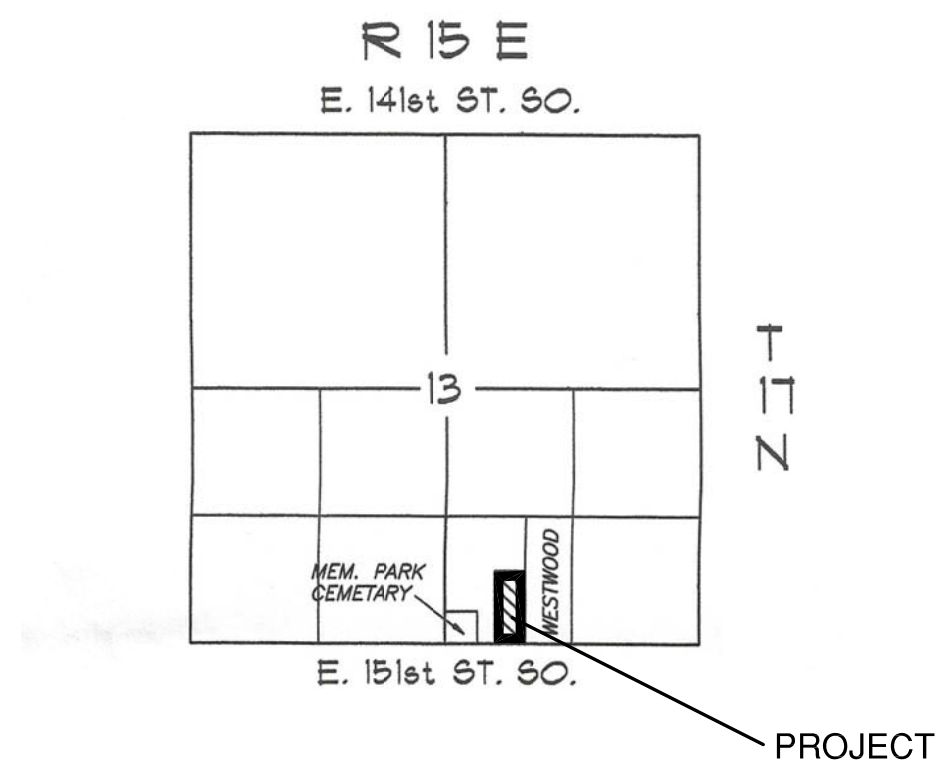

Index of Sheets

TITLE SHEET	1
GRADING & EROSION CONTROL PLAN	2
ROADWAY AND STROM PROFILES	2a
EROSION CONTROL DETAILS	3
DRAINAGE PLAN EXISTING	4
DRAINAGE PLAN DEVELOPED	4a
PAVING PLAN	5
SANITARY SEWER PLAN	6
WATERLINE PLAN	7
UTILITY PROFILES	8,8a,8b
SANITARY SEWER DETAILS	9,10
WATERLINE DETAILS	11

REGISTERED PROFESSIONAL ENGINEER
KATHLEEN A. COOK
21126
OKLAHOMA

06/11/2019

CITY OF COWETA STANDARD CONSTRUCTION SPECIFICATIONS SHALL GOVERN ALL CONSTRUCTION.

Call Okie

48 HOURS BEFORE YOU DIG! CALL OKIE 1-800-522-6543
UTILITIES LOCATION SHOWN ON PLAN AND PROFILE WERE OBTAINED FROM INFORMATION PROVIDED BY UTILITY SYSTEM OWNER IN CONJUNCTION WITH EXISTING PHYSICAL FEATURES VISIBLE AT THE TIME OF THE TOPOGRAPHIC SURVEY. LOCATIONS MUST BE VERIFIED BY THE CONTRACTOR PRIOR TO CONSTRUCTION.

Utility Note

EXISTING UTILITIES ARE SHOWN TO APPROXIMATE LOCATION. FIELD VERIFY EXACT LOCATION OF EXISTING UTILITIES AND UTILITY CROSSINGS.

DATE	REVISIONS
.	.
.	.
.	.
.	.

COOK & ASSOCIATES ENGINEERING INC.
• Engineering • Surveying • Geotechnical • Construction Management •
www.cook-eng.com
1486 East Poplar Street
Fort Gibson, OK 74434
918.478.3930 Office
918.478.5498 Fax
Certificate of Authorization #4479 Expires June 30, 2020

N W E S

STONEBROOK
Part of Section 13, T-17-N, R-15-E
COWETA, OKLAHOMA

TITLE SHEET

SCALE:	DESIGN	DATE	DRAWN	DATE
HORZ. .		10/2017		10/2017
VERT. .	CHK'D BY	DATE	APPROVED	DATE
	.	.	.	.
DRAWING NAME:	SHEET 1 OF 11		PROJECT NO.	

Erosion Control Legend

- STORM INLET SEDIMENT TRAP
- SILT FENCE
- STABILIZED CONSTRUCTION ENTRANCE
- PROPOSED CONTOUR (830)
- EXISTING CONTOUR (830)
- DRAINAGE ARROW
- BUILDING PAD

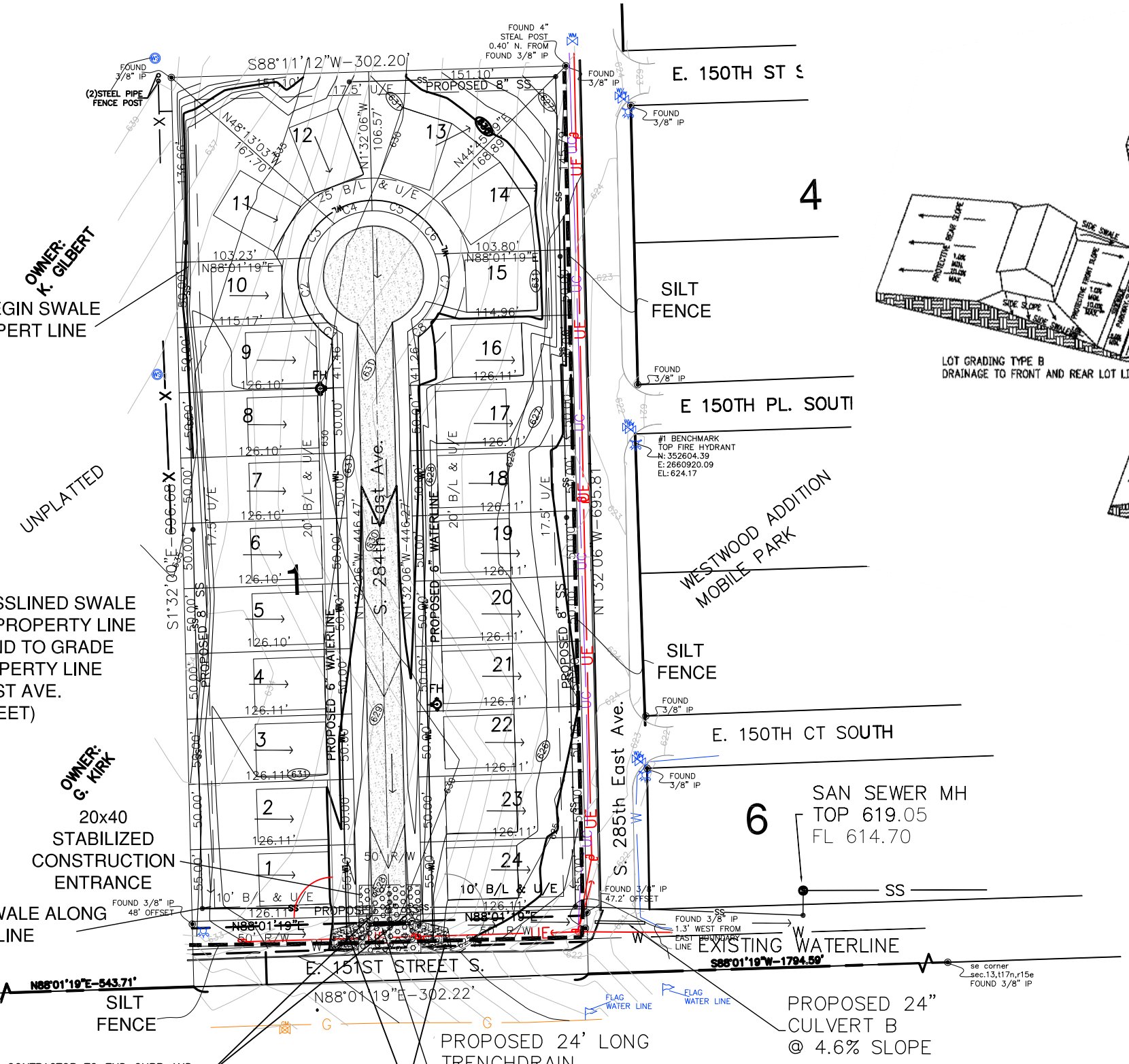

Paving Drainage Grading Notes

1. ALL PAVING, DRAINAGE AND EROSION CONTROL SHALL BE DESIGNED IN ACCORDANCE WITH THE CURRENT CITY OF COWETA LAND SUBDIVISION CODE AND CONSTRUCTED IN ACCORDANCE WITH THE CURRENT CITY OF COWETA STANDARD CONSTRUCTION SPECIFICATIONS.
2. THE CONTRACTOR SHALL FURNISH CERTIFICATION FROM THE MANUFACTURER/SUPPLIER THAT ALL MATERIALS MEET APPLICABLE SPECIFICATION. THIS INFORMATION SHALL INCLUDE MOISTURE DENSITY CURVES FOR MATERIAL TO BE USED FOR EMBANKMENT OR SUBGRADE CONSTRUCTION, AGGREGATE GRADATION TESTS, AND MIX DESIGNS FOR PORTLAND CEMENT CONCRETE AND/OR ASPHALTIC CONCRETE.
3. ALL PAVING, DRAINAGE AND EROSION CONTROL CONSTRUCTION SHALL BE INSPECTED BY THE ENGINEERING DEPARTMENT UTILITY INSPECTORS, IN ACCORDANCE WITH CITY OF COWETA.
4. ALL UTILITY CONSTRUCTION (WATER, SEWER, AND STORM WATER) SHALL BE COMPLETED PRIOR TO SUBGRADE PREPARATION.
5. SUBGRADE SHALL BE FREE OF ALL ORGANIC MATTER, TREATED, AND COMPACTED ACCORDING TO THE PLANS AND SPECIFICATIONS.
6. SEQUENCE OF CONSTRUCTION FOR LIME TREATED SUBGRADES SHALL BE BLUE TOP AND FINE GRADE, LIME TREATED AND STABILIZED, AND THEN FINAL FINE GRADING.
7. COMPACTION TESTS SHALL BE TAKEN A MINIMUM OF ONCE EVERY 4,500 SQUARE FEET FOR EACH EIGHT (8) INCH LIFT OF MATERIAL.
8. SUBGRADES SHALL BE PROOF ROLLED IF THE STABILITY OF THE MATERIAL IS QUESTIONED.
9. PAVING SHALL BE A MINIMUM OF 26' FACE TO FACE OF CURB AND CENTERED IN THE RIGHT OF WAY.
10. THE CONTRACTOR SHALL FURNISH THE FOLLOWING TESTING SERVICES BY A REPUTABLE INDEPENDENT TESTING LABORATORY APPROVED BY THE CITY:
    A. FIELD DENSITY TESTS OF EMBANKMENT, SUBGRADE, OR BASE, AT LOCATIONS SPECIFIED BY THE INSPECTOR.
    B. STABILITY, DENSITY, BITUMEN CONTENT AND GRADATION TESTS OF ASPHALTIC CONCRETE EVERY 200 TONS OR DAILY WHICH EVER IS LESS.
    C. COMPRESSION TEST OF CONCRETE CYLINDERS AT SEVEN (7) AND TWENTY-EIGHT (28) DAYS WITH ONE (1) OF EACH TESTS CONDUCTED FOR EVERY 100 CUBIC YARDS PLACED.
    D. ONE CORE SAMPLE, AT A LOCATION SPECIFIED BY THE INSPECTOR FOR EVERY 8,000 SQUARE FEET OF PAVEMENT.
11. THE PAVING CONTRACTOR SHALL ADJUST ALL VALVE BOXES TO GRADE AFTER PAVING OF STREETS HAS BEEN COMPLETED.
12. THE PAVING CONTRACTOR SHALL PLACE A CONCRETE COLLAR TWO (2) FEET SQUARE AND EQUIVALENT IN THICKNESS TO THE STREET BEING CONSTRUCTED, AROUND EACH VALVE BOX NOT LOCATED IN A PAVED AREA. THE VALVE BOX SHALL BE ADJUSTED TO GRADE PRIOR TO PLACING OF THE CONCRETE COLLAR.
13. THE PAVING CONTRACTOR SHALL MARK ALL WATER LINE CROSSINGS BY CUTTING A "W" 1/4 INCH DEEP IN THE FACE OF THE CURB, OVER THE CROSSING, AND PAINTING THE "W" BLUE. THE PAVING CONTRACTOR SHALL MARK ALL WATER VALVE LOCATIONS BY CUTTING A "V" 1/4 INCH DEEP IN THE FACE OF THE CURB, OVER THE VALVE, AND PAINTING THE "V" BLUE.
14. STORM SEWER BEDDING, BACKFILL, AND COMPACTION SHALL BE IN ACCORDANCE WITH STANDARD DRAWING ST01.
15. WHEN STORM SEWERS ARE CONSTRUCTED OF MATERIAL THAT DOES NOT HAVE A LOCKING BAND AT THE JOINTS, EACH JOINT WILL BE WRAPPED AS SHOWN IN STANDARD DRAWING ST02.
16. ALL DROP INLETS SHALL HAVE CAST IRON HOODS.
17. ALL CULVERTS SHALL BE FURNISHED WITH HEADWALLS ON BOTH ENDS, AND AN APRON ON THE DOWNSTREAM SIDE.
18. EROSION CONTROL SHALL START WITH INITIAL CONSTRUCTION AND BE PRACTICED THROUGHOUT THE PROJECT.
19. SILT FENCES SHALL BE CONSTRUCTED ADJACENT TO ALL DRAINAGE WAYS.
20. UPON COMPLETION OF THE STORM SEWER, SILT FENCES SHALL BE CONSTRUCTED IN ALL AREAS THAT WILL ERODE INTO THE STORM SEWER SYSTEM.
21. VEGETATIVE COVER SHALL BE ESTABLISHED ON ALL DISTURBED AREAS AS SOON AS THE WORK IS COMPLETED.
22. ROAD CLOSURES MUST BE COORDINATED A MINIMUM OF TWENTY FOUR (24) HOURS IN ADVANCE. ROADS WILL NOT BE CLOSED FOR OVER EIGHT (8) HOURS WITHOUT WRITTEN PERMISSION FROM THE ENGINEERING INSPECTOR'S DIVISION CHIEF.

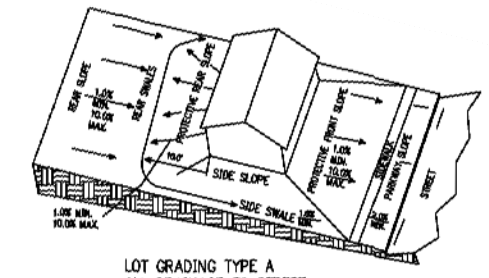

LOT GRADING TYPE A
ALL DRAINAGE TO STREET

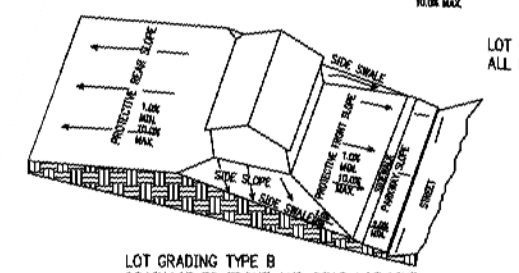

LOT GRADING TYPE B
DRAINAGE TO FRONT AND REAR LOT LINE

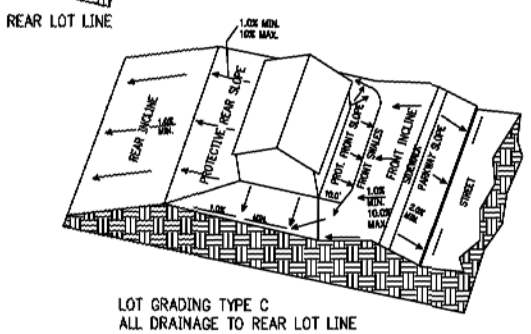

LOT GRADING TYPE C
ALL DRAINAGE TO REAR LOT LINE

TYPICAL FHA/VA THREE DIMENSIONAL GRADING PLAN

Utility Note

EXISTING UTILITIES ARE SHOWN TO APPROXIMATE LOCATION. FIELD VERIFY EXACT LOCATION OF EXISTING UTILITIES AND UTILITY CROSSINGS.

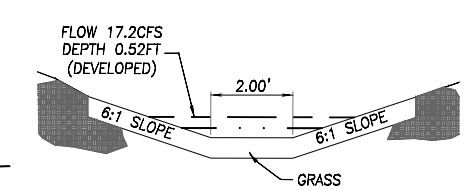

GRASS LINED SWALE
NOT TO SCALE

Call Okie

48 HOURS BEFORE YOU DIG! CALL OKIE 1-800-522-6543
UTILITIES LOCATION SHOWN ON PLAN AND PROFILE WERE OBTAINED FROM INFORMATION PROVIDED BY UTILITY SYSTEM OWNER IN CONJUNCTION WITH EXISTING PHYSICAL FEATURES VISIBLE AT THE TIME OF THE TOPOGRAPHIC SURVEY. LOCATIONS MUST BE VERIFIED BY THE CONTRACTOR PRIOR TO CONSTRUCTION.

CITY OF COWETA STANDARD CONSTRUCTION SPECIFICATIONS SHALL GOVERN ALL CONSTRUCTION.

REGISTERED PROFESSIONAL ENGINEER
KATHLEEN A. COOK
21126
OKLAHOMA

6/11/2019

DATE	REVISIONS
.	.
.	.
.	.
.	.

COOK & ASSOCIATES ENGINEERING INC.
• Engineering • Surveying • Geotechnical • Construction Management •
www.cook-eng.com
1486 East Poplar Street
Fort Gibson, OK 74434
918.478.3930 Office
918.478.5498 Fax
Certificate of Authorization #4479 Expires June 30, 2020

N W E S
50' 0' 50' 100'

STONEBROOK
Part of Section 13, T-17-N, R-15-E
Coweta, Oklahoma

Grading & Erosion Control Plan
Overall View

SCALE:	DESIGN	DATE	DRAWN	DATE
HORZ. .		10/2018		10/2018
VERT. .	CHK'D BY	DATE	APPROVED	DATE
	.	.	.	.
DRAWING NAME:	SHEET 2 OF 11		PROJECT NO.	

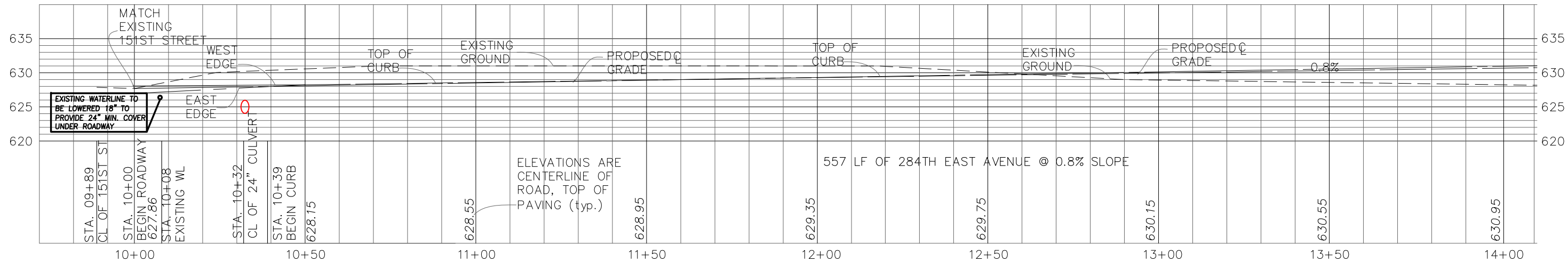

ROADWAY CENTERLINE PROFILE

SCALE HZ = 1"=30'
SCALE VT = 1"=15'

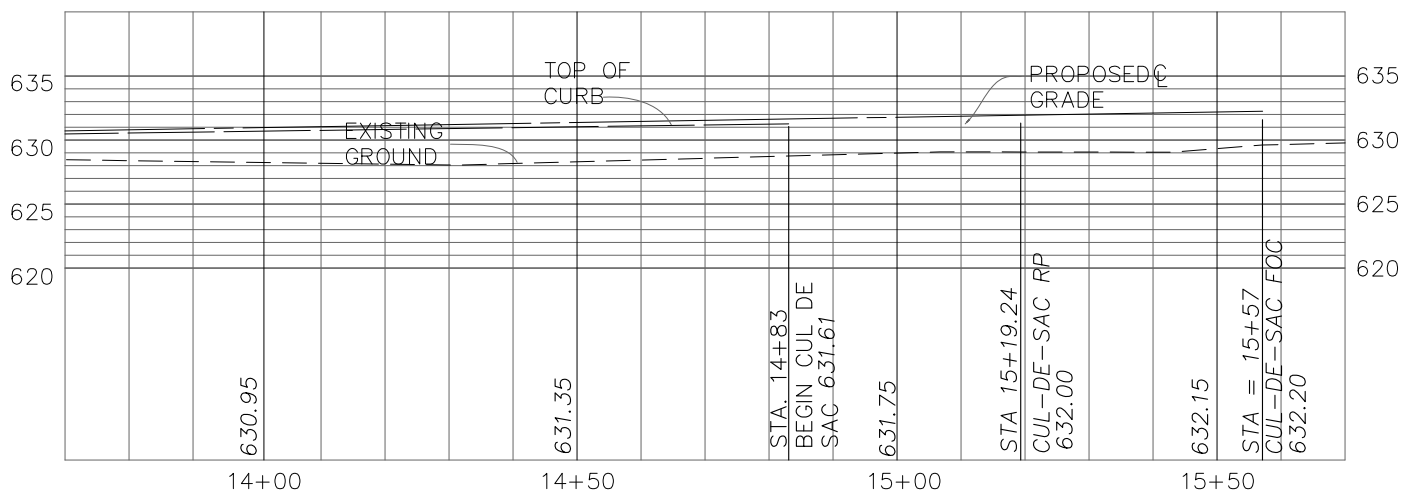

ROADWAY CENTERLINE PROFILE

SCALE HZ = 1"=30'
SCALE VT = 1"=15'

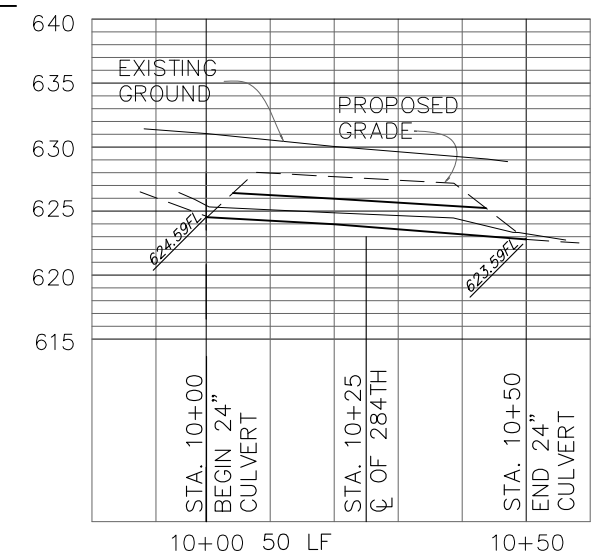

50 LF
24" CULVERT
@ 2.0%
Q100=20CFS
DEPTH=.7 FT
QCAP=48.0CFS
Ⓐ UNDER 284TH E. AVE

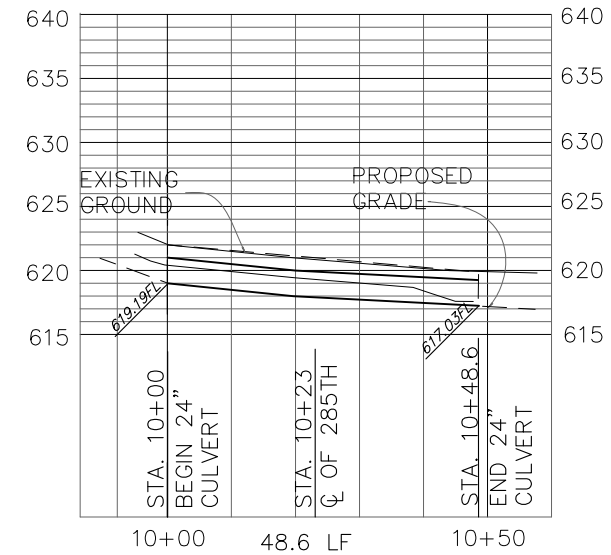

48.6 LF
24" CULVERT
@ 4.6%
Q100=35CFS
DEPTH=1.0 FT
QCAP=71.0CFS
Ⓑ UNDER 285TH E. AVE

24" CULVERT PROFILES

SCALE HZ = 1"=30'
SCALE VT = 1"=15'

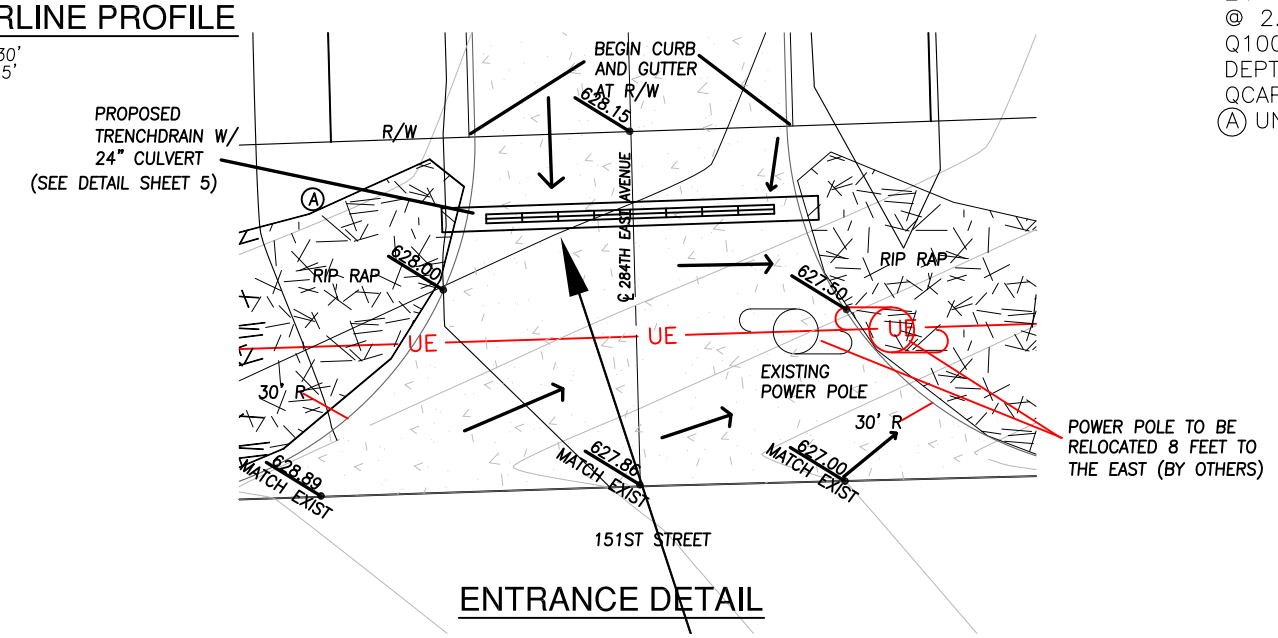

ENTRANCE DETAIL

CITY OF COWETA STANDARD CONSTRUCTION SPECIFICATIONS SHALL GOVERN ALL CONSTRUCTION.

Call Okie

48 HOURS BEFORE YOU DIG! CALL OKIE 1-800-522-6543
UTILITIES LOCATION SHOWN ON PLAN AND PROFILE WERE OBTAINED FROM INFORMATION PROVIDED BY UTILITY SYSTEM OWNER IN CONJUNCTION WITH EXISTING PHYSICAL FEATURES VISIBLE AT THE TIME OF THE TOPOGRAPHIC SURVEY. LOCATIONS MUST BE VERIFIED BY THE CONTRACTOR PRIOR TO CONSTRUCTION.

REGISTERED PROFESSIONAL ENGINEER
KATHLEEN A. COOK
21126
OKLAHOMA

06/11/2019

DATE	REVISIONS
.	.
.	.
.	.
.	.

COOK & ASSOCIATES ENGINEERING INC.
• Engineering • Surveying • Geotechnical • Construction Management •
www.cook-eng.com
1486 East Poplar Street
Fort Gibson, OK 74434
918.478.3930 Office
918.478.5498 Fax
Certificate of Authorization #4479 Expires June 30, 2020

N W E S
50' 0' 50' 100'

STONEBROOK
Part of Section 13, T-17-N, R-15-E
Coweta, Oklahoma

ROADWAY & STORM PROFILE
S. 286th East Ave.

SCALE:	DESIGN	DATE	DRAWN	DATE
HORZ. .		10/2018		10/2018
VERT. .	CHK'D BY	DATE	APPROVED	DATE
	.	.	.	.
DRAWING NAME:	SHEET 2a OF 10		PROJECT NO.	

Erosion Control Notes (Standard)

EROSION CONTROL DEVICES AS SHOWN ON THE EROSION CONTROL PLAN FOR THE PROJECT SHALL BE INSTALLED PRIOR TO THE START OF LAND DISTURBING ACTIVITIES ON THE PROJECT.

1. ALL EROSION CONTROL DEVICES ARE TO BE INSTALLED IN ACCORDANCE WITH THE APPROVED PLANS AND SPECIFICATIONS FOR THE PROJECT.
CHANGES ARE TO BE APPROVED BEFORE CONSTRUCTION BY THE DESIGN ENGINEER.
2. IF THE EROSION CONTROL PLAN AS APPROVED CANNOT CONTROL EROSION AND OFF-SITE SEDIMENTATION FROM THE PROJECT, THE EROSION CONTROL PLAN WILL BE REVISED AND/OR ADDITIONAL EROSION CONTROL DEVICES WILL BE REQUIRED ON SITE.
3. IF OFF-SITE SOIL BORROW OR SPOIL SITES ARE USED IN CONJUNCTION WITH THIS PROJECT, THIS INFORMATION SHALL BE DISCLOSED AND SHOWN ON THE EROSION CONTROL PLAN. OFF-SITE BORROW AND SPOIL AREAS ARE CONSIDERED A PART OF THE PROJECT SITE AND THEREFORE SHALL COMPLY WITH THE CITY OF CATOOSA EROSION CONTROL REQUIREMENTS. THESE AREAS SHALL BE STABILIZED WITH PERMANENT GROUND COVER PRIOR TO FINAL APPROVAL OF THE PROJECT.

THE OWNER/DEVELOPER, THEMSELVES OR THROUGH THE USE OF INDIVIDUAL CONTRACTORS, SHALL BE HELD TOTALLY RESPONSIBLE FOR COMPLYING WITH ANY OR ALL APPLICABLE EROSION AND SEDIMENTATION CONTROL AND POLLUTION PREVENTION REQUIREMENTS ESTABLISHED BY FEDERAL, STATE AND LOCAL AGENCIES OR ANY OTHER GOVERNING AGENCY SPECIFICALLY RELATED TO THE PROJECT. THE LOCATION, INSTALLATION, AND MAINTENANCE OF ALL EROSION CONTROL PRACTICES ON THIS PROJECT SHALL BE DONE IN COMPLETE ACCORDANCE WITH THE STORMWATER POLLUTION PREVENTION PLAN (FOR THE PROJECT) AND OPDES GENERAL PERMIT OKR-10.

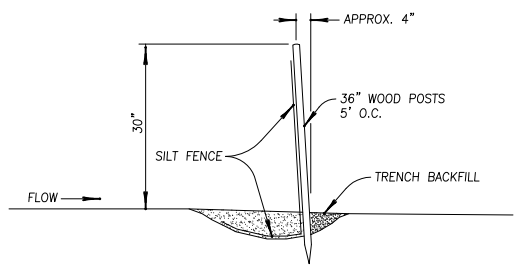

1. WOOD POSTS SHALL BE ANGLED SLIGHTLY TOWARD RUNOFF SOURCE.
2. THE TOE OF THE SILT FENCE SHALL BE TRENCHED IN AND BACKFILLED.
3. THE TRENCH SHOULD BE 6" DEEP BY 3" TO 4" WIDE TO ALLOW SILT FENCE TO BE LAID IN AND BACKFILLED.
4. SILT FENCE SHALL BE FASTENED TO POSTS OR TO WOVEN WIRE, WHICH IS IN TURN ATTACHED TO THE STEEL POSTS.
5. INSPECTION SHALL BE FREQUENT & REPAIR OR REPLACEMENT SHALL BE MADE PROMPTLY.
6. SILT FENCES SHALL BE REMOVED WHEN THEY HAVE SERVED THERE USEFULNESS SO AS NOT TO IMPEDE STORMWATER FLOW OR DRAINAGE.
7. TRAPPED SEDIMENT SHALL BE DISPOSED OF IN AN APPROVED MANNER AND LOCATION WHICH WILL NOT CONTRIBUTE TO ADDITIONAL SILTATION.
8. ACCUMULATED SILT SHALL BE REMOVED WHEN IT REACHES A DEPTH OF 6" AND DISPOSED OF AS IN NOTE 7 ABOVE.

A Silt Fence Detail
SCALE: NONE

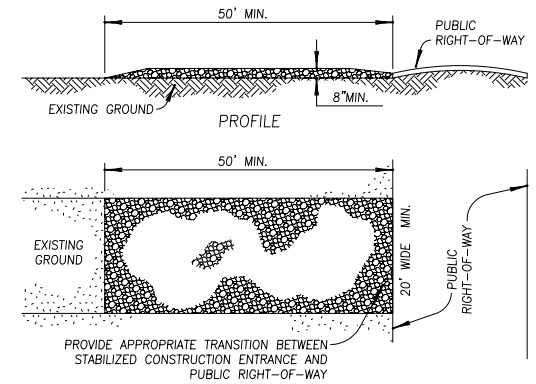

1. STONE SIZE AASHTO DESIGNATION M 43, SIZE NO. 2 (2-1/2" TO 1-1/2"). USE CRUSHED STONE.
2. LENGTH - AS EFFECTIVE, BUT NOT LESS THAN 50 FEET.
3. THICKNESS - NOT LESS THAN EIGHT(8) INCHES.
4. WIDTH - NOT LESS THAN FULL WIDTH OF ALL POINTS OF INGRESS OR EGRESS.
5. MAINTENANCE - THE ENTRANCE SHALL BE MAINTAINED IN A CONDITION WHICH WILL PREVENT TRACKING OR FLOWING OF SEDIMENT ONTO PUBLIC RIGHTS-OF-WAY. THIS MAY REQUIRE PERIODIC TOP DRESSING WITH ADDITIONAL STONE AS CONDITIONS DEMAND AND REPAIR AND/OR CLEANOUT OF ANY MEASURES USED TO TRAP SEDIMENT. ALL SEDIMENT SPILLED, DROPPED, WASHED OR TRACKED ONTO PUBLIC RIGHTS-OF-WAY MUST BE REMOVED IMMEDIATELY BY THE OWNER.

B Stabilized Construction Entrance
SCALE: NONE

Erosion Control Notes (Revegetation)

A. TEMPORARY PRACTICES
SMALL GRAINS LIKE OATS, RYE AND WHEAT, AND SUDANS AND SORGHUMS ARE THE MOST FEASIBLE TEMPORARY VEGETATION TO CONTROL EROSION FOR THE BROKEN ARROW AREA. THIS PRACTICE IS EFFECTIVE FOR AREAS WHERE SOIL IS LEFT EXPOSED FOR A PERIOD OF 6 TO 12 MONTHS. THE TIME PERIOD MAY BE SHORTER DURING PERIODS OF EROSION RAINFALL.
1. PRIOR TO SEEDING, NEEDED EROSION CONTROL PRACTICES SUCH AS GRADE STABILIZATION STRUCTURES, BERMS, DIKES, ETC. SHALL BE INSTALLED.
2. TEMPORARY VEGETATIVE PRACTICE IS USUALLY APPLIED PRIOR TO THE COMPLETION OF FINAL GRADING OF THE SITE.
3. IF THE AREA TO BE SEEDED HAS BEEN RECENTLY LOOSENED TO THE EXTENT THAT AN ADEQUATE SEEDBED EXISTS, NO ADDITIONAL TREATMENT IS REQUIRED. HOWEVER, IF THE AREA TO BE SEEDED IS PACKED, CRUSTED AND HARD, THE TOP LAYER OF SOIL SHALL BE LOOSENED BY OTHER SUITABLE MEANS.
4. FERTILIZER SHALL BE APPLIED AT RATE OF 600 POUNDS PER ACRE OR 15 POUNDS PER 1000 SQUARE FOOT USING 10-20-10 OR EQUIVALENT.
5. SOILS KNOWN TO BE HIGHLY ACIDIC SHALL BE LIME TREATED.
6. SEEDING REQUIREMENTS SHALL BE AS SPECIFIED IN THE FOLLOWING:

PLANT	PER ACRE	PER 1000 SQ.FT.	PLANTING DATE	DEPTH OF SEEDING
ANNUAL RYEGRASS	40 Lbs.	0.9 Lbs.	9/15-11/30	¼"
ELBON RYE	2 Bu.	3.0 Lbs.	8/15-11/30	2"
WHEAT	2 Bu.	3.0 Lbs.	8/15-11/30	2"
OATS	3 Bu.	2.5 Lbs.	8/15-11/30	2"
SORGHUM	60 Lbs.	1.4 Lbs.	3/1 - 9/15	2"
SUDAN GRASS	40 Lbs.	0.9 Lbs.	4/1 - 9/15	2"

7. SEEDS SHALL BE DRILLED UNIFORMLY.
8. SEEDING IMPLEMENTS SHOULD BE USED AT RIGHT ANGLES TO THE GENERAL SLOPE TO MINIMIZE EROSION.
9. AFTER 2 TO 3 MONTHS OF PLANTING THE SEEDED SITE SHALL BE TOP DRESSED WITH 8 POUNDS PER 1000 SQUARE FEET OF 350 POUNDS PER ACRE OF 33-0-0.
10. AREAS THAT ARE NOT WELL COVERED SHALL BE REPLANTED.
11. THE SEEDED AREA SHALL BE WATERED WHEN FEASIBLE AND NEEDED.

B. PERMANENT PRACTICES
BERMUDA GRASS, KENTUCKY 31 TALL FESCUE AND WEEPING LOVEGRASS ARE SOME OF THE TYPES OF PERMANENT VEGETATION THAT COULD BE EFFECTIVELY USED TO CONTROL EROSION.
1. PRIOR TO SEEDING, NEEDED EROSION CONTROL PRACTICES SUCH AS DIKES, SWALES, DIVERSIONS, ETC. SHALL BE INSTALLED.
2. THE SUBGRADE SHALL BE LOOSENED EVENLY TO A DEPTH OF 2 TO 3 INCHES AND 10-20-10 FERTILIZER (10 POUNDS PER 1000 SQUARE FEET OR 450 POUNDS PER ACRE) SHALL BE MIXED WITH THE LOOSENED SURFACE SOIL BY DISCING OR OTHER SUITABLE MEANS.
3. SOILS KNOWN TO BE HIGHLY ACIDIC SHALL BE LIME TREATED.
4. PLANTING RATE REQUIREMENTS SHALL BE AS SPECIFIED IN THE FOLLOWING TABLE:

PLANT	PER ACRE	PER 1000 SQ.FT.	PLANTING DATE	DEPTH OF SEEDING
BERMUDA GRASS	10 LBS.	0.25 LBS.	4/1 - 8/15	0-1/2"
FESCUE	40 LBS.	0.90 LBS.	9/1 -11/1	0-1/2"
LOVEGRASS	5 LBS.	0.10 LBS.	4/1 - 6/30	0-1/2"

5. SEEDS SHALL BE DRILLED UNIFORMLY.
6. SEEDING IMPLEMENTS SHOULD BE USED AT RIGHT ANGLES TO THE GENERAL SLOPE TO MINIMIZE EROSION.
7. MULCH WILL BE USED WHERE NEEDED.
8. THE AREA SHALL BE WATERED DAILY OR AS OFTEN AS NECESSARY TO MAINTAIN ADEQUATE SOIL MOISTURE UNTIL THE PLANTS GROW ABOUT 1/2 - 1 INCH.

THIS PLAN IS FOR SOIL EROSION AND SEDIMENT CONTROL PURPOSES ONLY!

REGISTERED PROFESSIONAL ENGINEER
KATHLEEN A. COOK
21126
OKLAHOMA

4/12/2018

Call Okie

48 HOURS BEFORE YOU DIG! CALL OKIE
1-800-522-6543
UTILITIES LOCATION SHOWN ON PLAN AND PROFILE WERE OBTAINED FROM INFORMATION PROVIDED BY UTILITY SYSTEM OWNER IN CONJUNCTION WITH EXISTING PHYSICAL FEATURES VISIBLE AT THE TIME OF THE TOPOGRAPHIC SURVEY. LOCATIONS MUST BE VERIFIED BY THE CONTRACTOR PRIOR TO CONSTRUCTION.

CITY OF COWETA STANDARD CONSTRUCTION SPECIFICATIONS SHALL GOVERN ALL CONSTRUCTION.

DATE	REVISIONS
.	.
.	.
.	.
.	.

COOK & ASSOCIATES ENGINEERING INC.
• Engineering • Surveying • Geotechnical • Construction Management •
www.cook-eng.com
1486 East Poplar Street
Fort Gibson, OK 74434
918.478.3930 Office
918.478.5498 Fax
Certificate of Authorization #4479 Expires June 30, 2020

STONEBROOK
Part of Section 13, T-17-N, R-15-E
Coweta Oklahoma

Erosion Control Details

SCALE:	DESIGN	DATE	DRAWN	DATE
HORZ. .				
VERT. .	CHK'D BY	DATE	APPROVED	DATE
	.	.	.	.
DRAWING NAME:	SHEET 3 OF 11		PROJECT NO.	

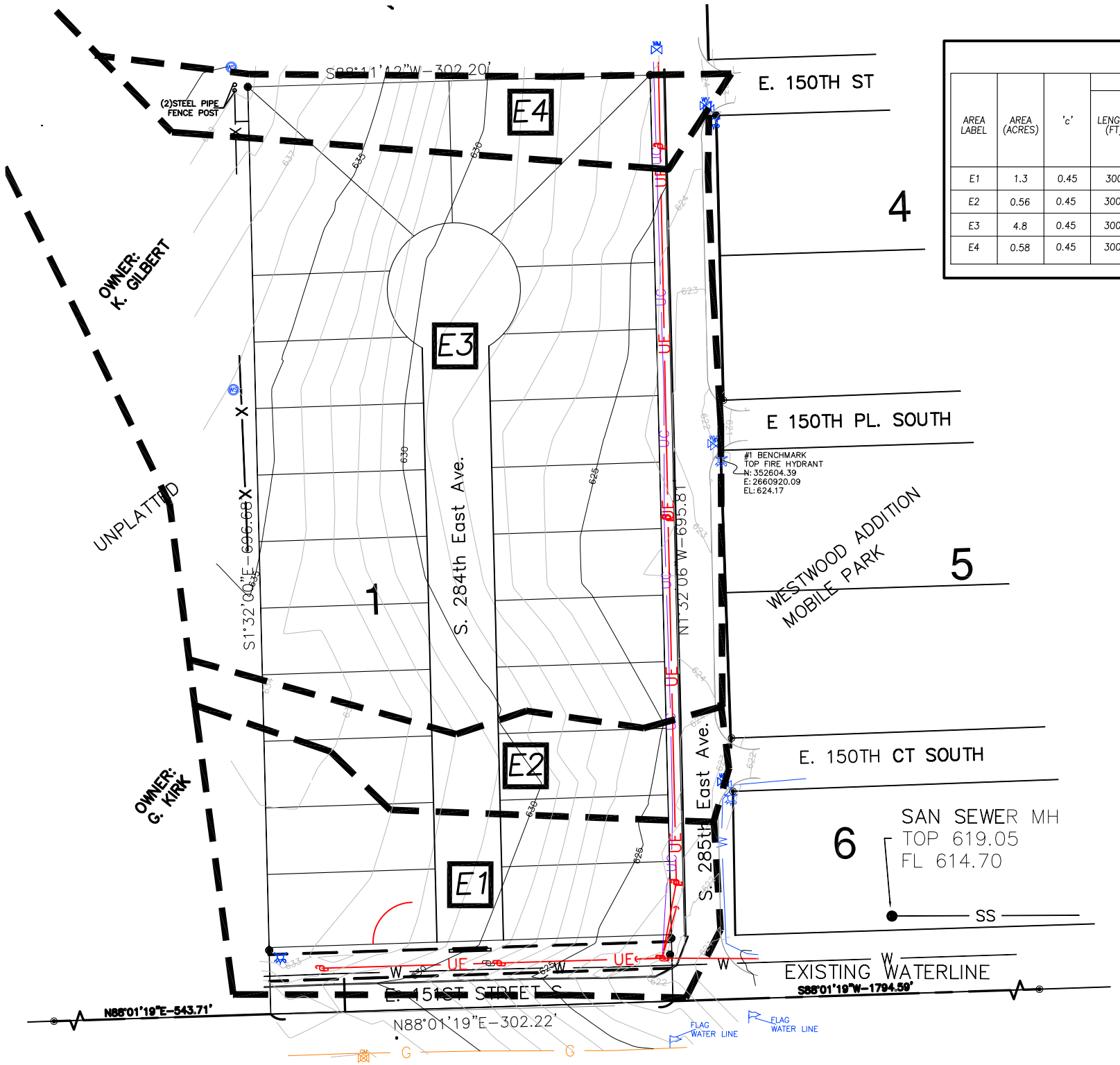

Drainage Summary Table

AREA LABEL	AREA (ACRES)	'c'	OVERLAND TRAVEL LENGTH (FT)	OVERLAND TRAVEL SLOPE (%)	OVERLAND TRAVEL VELOCITY (FPS)	OVERLAND TRAVEL T_i (MIN)	CHANNELIZED TRAVEL LENGTH (FT)	CHANNELIZED TRAVEL SLOPE (%)	CHANNELIZED TRAVEL VELOCITY (FPS)	CHANNELIZED TRAVEL T_i (MIN)	TOTAL T_c (MIN)	INLET SLOPE (%)	I5 (IN/HR)	Q5 (CFS)	I100 (IN/HR)	Q100 CIA (CFS)	Q100 BYPASS (CFS)	Q100 DEPTH (FT)	Q100 INTERCEPT (CFS)	INLET DESIGN
E1	1.3	0.45	300	4.1	1.43	3.5	143	4.1	3.04	0.8	4.3	SUMP	6.71	3.91	10.66	6.2	0.0		6.2	EXISTING FLOW TO 151ST
E2	0.56	0.45	300	4.1	1.43	3.5	109	4.1	3.04	0.6	4.1	SUMP	6.76	1.70	10.74	2.7	0.0		2.7	EXISTING FLOW TO HICKORY PL
E3	4.8	0.45	300	3.1	1.24	4.0	576	3.1	2.64	3.6	7.6	SUMP	5.98	12.9	9.51	20.5	0.0		20.5	EXISTING FLOW TO HICKORY ST
E4	0.58	0.45	300	3.7	1.36	3.7	172	3.7	2.89	1.0	4.7	SUMP	6.61	1.73	10.5	2.7	0.0		2.7	EXISTING FLOW TO WALNUT ST

EXISTING DRAINAGE PLAN SHOWS MOST OF THE DRAINAGE AREA GOING TOWARD THE TRAILER PARK STREETS AND THEN TO THE CREEK. ONLY 2 ACRES OF THE 6.7 ACRES FLOW TOWARD THE DITCH ALONG 151ST STREET. THE DITCH IS MORE THAN ADEQUATE TO CONTAIN THE EXISTING FLOW.

DRAINAGE AREA
AREA = 2.0 ACRES
EXISTING C=0.45, CN=80.25
EXISTING Q100=9.7CFS

EXISTING DITCH MAX Q=98CFS
DEPTH=2FT
V DITCH WITH 3:1 SIDE SLOPES
@ 2.0% SLOPE
(SLOPE OBTAINED FROM GOOGLE MAPS)

Legend

- PROPOSED CONTOUR — 830
- EXISTING CONTOUR — 830
- DRAINAGE AREA BOUNDARY
- DRAINAGE AREA LABEL — E1

CITY OF COWETA STANDARD CONSTRUCTION SPECIFICATIONS SHALL GOVERN ALL CONSTRUCTION.

Call Okie

48 HOURS BEFORE YOU DIG! CALL OKIE 1-800-522-6543
UTILITIES LOCATION SHOWN ON PLAN AND PROFILE WERE OBTAINED FROM INFORMATION PROVIDED BY UTILITY SYSTEM OWNER IN CONJUNCTION WITH EXISTING PHYSICAL FEATURES VISIBLE AT THE TIME OF THE TOPOGRAPHIC SURVEY. LOCATIONS MUST BE VERIFIED BY THE CONTRACTOR PRIOR TO CONSTRUCTION.

Utility Note

EXISTING UTILITIES ARE SHOWN TO APPROXIMATE LOCATION. FIELD VERIFY EXACT LOCATION OF EXISTING UTILITIES AND UTILITY CROSSINGS.

REGISTERED PROFESSIONAL ENGINEER
KATHLEEN A. COOK
21126
OKLAHOMA
5/2/2019

DATE	REVISIONS
.	.
.	.
.	.
.	.

COOK & ASSOCIATES ENGINEERING INC.
• Engineering • Surveying • Geotechnical • Construction Management •
www.cook-eng.com
1486 East Poplar Street
Fort Gibson, OK 74434
918.478.3930 Office
918.478.5498 Fax
Certificate of Authorization #4479 Expires June 30, 2020

N W E S
50' 0' 50' 100'

STONEBROOK
Part of Section 13, T-17-N, R-15-E
Coweta, Oklahoma

Drainage Area Map
EXISTING CONDITIONS

SCALE:	DESIGN	DATE	DRAWN	DATE
HORZ. .				
VERT. .	CHK'D BY	DATE	APPROVED	DATE
	.	.	.	.
DRAWING NAME:	SHEET 4 OF 11		PROJECT NO.	

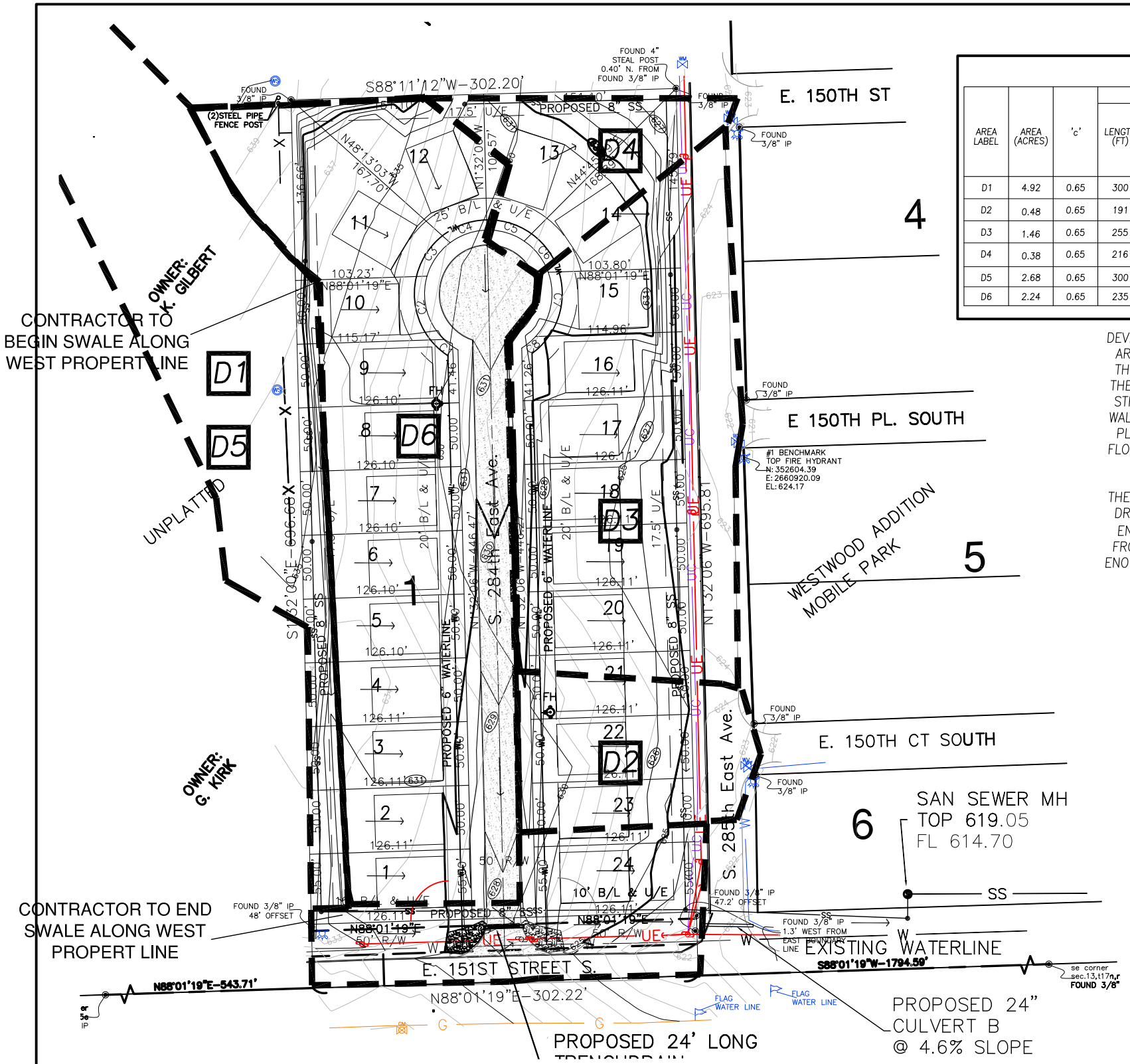

Drainage Summary Table

AREA LABEL	AREA (ACRES)	'c'	OVERLAND TRAVEL LENGTH (FT)	OVERLAND TRAVEL SLOPE (%)	OVERLAND TRAVEL VELOCITY (FPS)	OVERLAND TRAVEL T_i (MIN)	CHANNELIZED TRAVEL LENGTH (FT)	CHANNELIZED TRAVEL SLOPE (%)	CHANNELIZED TRAVEL VELOCITY (FPS)	CHANNELIZED TRAVEL T_i (MIN)	TOTAL T_c (MIN)	INLET SLOPE (%)	I5 (IN/HR)	Q5 (CFS)	I100 (IN/HR)	Q100 CIA (CFS)	Q100 BYPASS (CFS)	Q100 DEPTH (FT)	Q100 INTERCEPT (CFS)	INLET DESIGN
D1	4.92	0.65	300	2.5	2.10	2.4	650	1.34	1.90	5.8	8.2	SUMP	5.86	18.7	9.31	29.8	0.0	.43	29.8	24" CULVERT UNDER 285TH
D2	0.48	0.65	191	2.9	1.2	2.65					2.65	SUMP	7.14	2.2	11.33	3.5			3.5	DEVELOPED FLOW TO HICKORY PL
D3	1.46	0.65	255	2.8	1.18	3.60					3.60	SUMP	6.89	6.5	10.94	10.38			10.38	DEVELOPED FLOW TO HICKORY ST
D4	0.38	0.65	216	3.1	1.24	2.90					2.90	SUMP	7.08	1.7	11.24	2.8			2.8	DEVELOPED FLOW TO WALNUT ST
D5	2.68	0.65	300	2.5	2.10	2.4	400	1.25	1.67	4.0	6.4	SUMP	6.22	10.83	9.90	17.2	0.0		17.2	WEST SIDE SWALE
D6	2.24	0.65	235	2.9	1.2	3.26	514	0.8	3.0	2.86	6.12	SUMP	6.29	9.16	10.00	14.6	0.0		14.6	STREET FLOW

DEVELOPED CONDITIONS SHOW 4.9 ACRES OF THE DRAINAGE AREA TO FLOW TOWARD THE DITCH ALONG 151ST STREET. THIS INCREASES THE FLOWS TO THE DITCH AND REDUCES THE TOTAL FLOW DRAMATICALLY TOWARD THE TRAILER PARK STREETS. HICKORY ST FLOW WILL BE REDUCED BY HALF. WALNUT STREET WILL INCREASE BY 0.7 CFS AND HICKORY PLACE WILL INCREASE BY 0.1 CFS. EVEN THOUGH THE FLOWS ARE INCREASED IN THE DITCH. THE DITCH IS MORE THAN ADEQUATE TO CONTAIN THE DEVELOPED FLOW.

THE DITCH ALONG 151ST WILL BE GRADED SO THAT IT WILL DRAIN FROM THE PROPOSED EAST SIDE OF THE ROADWAY ENTRANCE TO THE 24" CULVERT AND THEN DOWNSTREAM FROM THE CULVERT TO THE CREEK. THERE IS MORE THAN ENOUGH SLOPE AND VOLUME IN THE DITCH TO CONTAIN THE 100 YEAR FREQUENCY FLOW.

Legend

- PROPOSED CONTOUR — 830
- EXISTING CONTOUR — 830
- DRAINAGE AREA BOUNDARY
- DRAINAGE AREA LABEL — D1

100YR FREQUENCY FLOW 14.6 CFS IN PROPOSED 284TH EAST AVENUE STREET WILL HAVE A MAXIMUM DEPTH OF 0.35FT WITH A VELOCITY OF 3.0 FPS

DRAINAGE AREA
AREA = 4.9 ACRES

PROPOSED C=0.65 CN=84
PROPOSED Q100=29.8 CFS

EXISTING DITCH MAX Q=98CFS
DEPTH=2FT
V DITCH WITH 3:1 SIDE SLOPES
@ 2.0% SLOPE
(SLOPE OBTAINED FROM GOOGLE MAPS)

24" HDPE PIPE
@ 2% SLOPE
FULL FLOW = 48 CFS
@ 4.6% SLOPE
FULL FLOW = 71 CFS

CITY OF COWETA STANDARD CONSTRUCTION SPECIFICATIONS SHALL GOVERN ALL CONSTRUCTION.

Call Okie

48 HOURS BEFORE YOU DIG! CALL OKIE 1-800-522-6543
UTILITIES LOCATION SHOWN ON PLAN AND PROFILE WERE OBTAINED FROM INFORMATION PROVIDED BY UTILITY SYSTEM OWNER IN CONJUNCTION WITH EXISTING PHYSICAL FEATURES VISIBLE AT THE TIME OF THE TOPOGRAPHIC SURVEY. LOCATIONS MUST BE VERIFIED BY THE CONTRACTOR PRIOR TO CONSTRUCTION.

Utility Note

EXISTING UTILITIES ARE SHOWN TO APPROXIMATE LOCATION. FIELD VERIFY EXACT LOCATION OF EXISTING UTILITIES AND UTILITY CROSSINGS.

REGISTERED PROFESSIONAL ENGINEER
KATHLEEN A. COOK
21126
OKLAHOMA

5/20/2019

DATE	REVISIONS
.	.
.	.
.	.
.	.

COOK & ASSOCIATES ENGINEERING INC.
• Engineering • Surveying • Geotechnical • Construction Management •
www.cook-eng.com
1486 East Poplar Street
Fort Gibson, OK 74434
918.478.3930 Office
918.478.5498 Fax
Certificate of Authorization #4479 Expires June 30, 2020

N W E S
50' 0' 50' 100'

STONEBROOK

Part of Section 13, T-17-N, R-15-E
Coweta, Oklahoma

Drainage Area Map

DEVELOPED CONDITIONS

SCALE:	DESIGN	DATE	DRAWN	DATE
HORZ. .				
VERT. .	CHK'D BY	DATE	APPROVED	DATE
	.	.	.	.
DRAWING NAME:	SHEET 4a OF 11		PROJECT NO.	

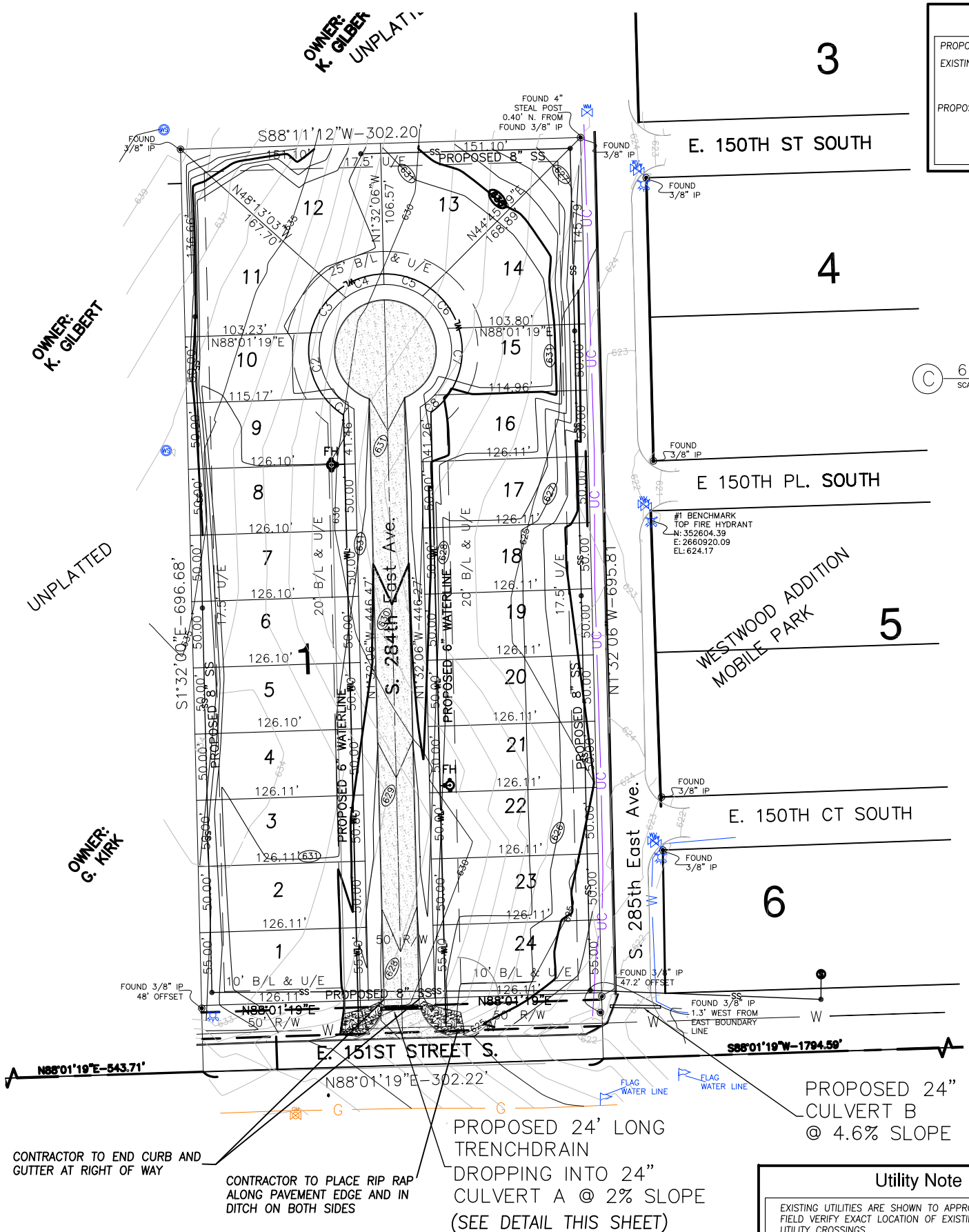

Legend

PROPOSED CONTOUR	830
EXISTING CONTOUR	830
PROPOSED PAVEMENT	

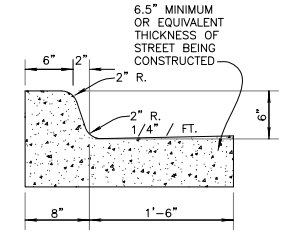

C 6" Barrier Curb & Gutter
SCALE: NONE

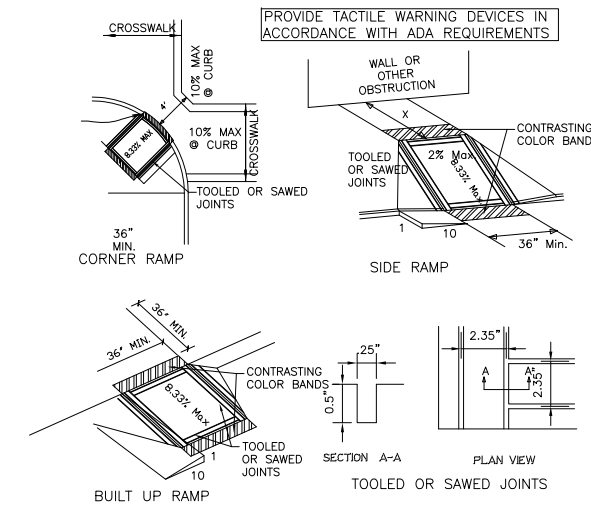

1. DETECTABLE WARNING, CONTRASTING COLOR BANDS, SHALL CONTRAST VISUALLY WITH ADJOINING SURFACE, EITHER LIGHT ON DARK, OR DARK ON LIGHT.
2. THE MATERIAL USED TO PROVIDE CONTRAST SHALL BE AN INTEGRAL PART OF THE WALKING SURFACE.
3. CROSS SLOPE OF LANDING AREA DOES NOT EXCEED 2% IN ANY DIRECTION.
4. WHEN X IS LESS THAN 48", THE SLOPE OF THE FANNED OR FLARED SIDES MUST NOT EXCEED 1:12 (8.33%)
5. BUILT UP RAMPS ARE NOT ALLOWED TO ENCROACH INTO LOADING/UNLOADING ZONES PARKING SPACES OR VEHICULAR TRAFFIC LANES.
6. ADA REQUIRES ON ALL CONCRETE SIDEWALKS A DETECTABLE WARNING SURFACE – YELLOW POLYETHYLENE TACTILE WARNING DEVICES/TRUNCATED DOMES TO BE INSTALLED AT HAZARDOUS VEHICLE WAYS, CURB RAMPS AND TRANSIT PLATFORM EDGES.

A Sidewalk & Wheelchair Ramp
SCALE: NONE

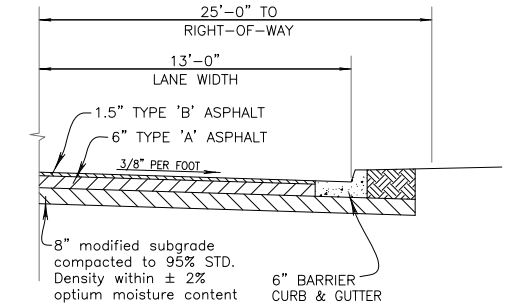

B Asphalt Pavement Section
SCALE: NONE

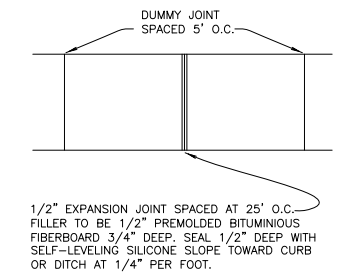

D Concrete Sidewalk
SCALE: NONE

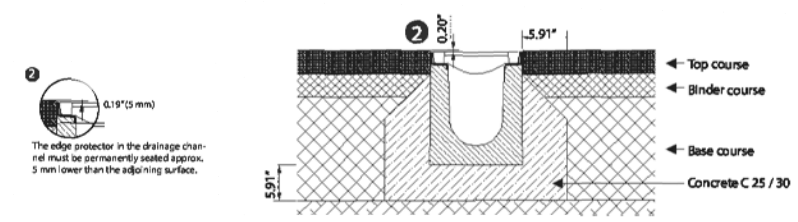

E TRENCHDRAIN DETAIL
SCALE: NONE

Paving Notes

1. ALL STREET AND STORM SEWER CONSTRUCTION SHALL BE IN STRICT ACCORDANCE WITH THE STANDARDS AND SPECIFICATIONS OF THE CITY OF COWETA.

2. PAVING SHALL BE A MINIMUM OF 26' FACE TO FACE OF CURB AND CENTERED IN THE RIGHT-OF-WAY.

3. SURFACING FOR RESIDENTIAL STREETS SHALL BE AS SHOWN ON DETAIL THIS SHEET.

4. PORTLAND CEMENT CONCRETE SHALL HAVE A 28 DAY COMPRESSIVE STRENGTH OF NOT LESS THAN 3,500 PSI, A SLUMP OF NOT MORE THAN 3", AND SHALL CONTAIN SIX (6%) AIR ±1 PERCENT.

5. ASPHALTIC CONCRETE SHALL HAVE DENSITY OF NOT LESS THAN 94% NOR MORE THAN 98% AND HVEEM STABILITY OF NOT LESS THAN 40%.

6. THE CONTRACTOR SHALL FURNISH THE FOLLOWING TESTING SERVICES BY A REPUTABLE INDEPENDENT TESTING LABORATORY APPROVED BY THE CITY:
(a) MIX DESIGNS FOR PORTLAND CEMENT CONCRETE AND ASPHALTIC CONCRETE
(b) AGGREGATE GRADATION TESTS
(c) MOISTURE DENSITY CURVES FOR MATERIAL TO BE USED FOR EMBANKMENT OR SUBGRADE CONSTRUCTION
(d) FIELD DENSITY TESTS OF EMBANKMENT OR SUBGRADE AT LOCATIONS SPECIFIED BY THE INSPECTOR.
(e) PLASTICITY TESTS OF THE SUBGRADE AT LOCATIONS SPECIFIED BY THE ENGINEER TO DETERMINE REQUIREMENTS FOR SOIL STABILIZATION. LIME STABILIZATION SHALL BE USED IF THE PI IS OVER TEN (10). SOIL CEMENT OR FLYASH SHALL BE USED IF THE SUBGRADE MATERIAL IS NON-PLASTIC.
(f) STABILITY, DENSITY, BITUMIN CONTENT AND GRADATION TESTS OF ASPHALTIC CONCRETE ON A DAILY BASIS.
(g) COMPRESSION TESTS OF CONCRETE CYLINDERS

7. THE CONTRACTOR SHALL FURNISH CERTIFICATION FROM THE MANUFACTURER THAT ALL MATERIALS MEET APPLICABLE SPECIFICATIONS. COPIES OF MATERIAL CERTIFICATION SHALL BE FURNISHED TO THE CITY ENGINEER PRIOR TO INSTALLATION OR INCORPORATION OF MATERIAL IN THE WORK.

8. IT IS THE PAVING CONTRACTOR'S RESPONSIBILITY TO ADJUST ALL VALVE BOXES TO GRADE AFTER PAVING OF STREETS HAS BEEN COMPLETED. THE PAVING CONTRACTOR SHALL PLACE A CONCRETE COLLAR TWO FEET (2') SQUARE AND FOUR INCHES (4") THICK AROUND EACH VALVE BOX NOT LOCATED IN A PAVED AREA. THE VALVE BOX SHALL BE ADJUSTED TO GRADE PRIOR TO PLACING OF THE CONCRETE COLLAR (COST TO BE INCLUDED IN PRICE BID FOR ASPHALT PAVING).

9. MANHOLES AND APPURTENANCE DETAILS SHALL BE APPROVED BY THE CITY ENGINEER BEFORE CONSTRUCTION IS STARTED.

10. STORM SEWER LINES LOCATED UNDER PAVED STREETS SHALL BE LAID IN CRUSHED ROCK BEDDING AND THE TRENCH COMPLETELY FILLED TO SUBGRADE WITH CRUSHED 95% STANDARD DENSITY.

11. CONTRACTOR SHALL NOTIFY THE CITY ENGINEER'S OFFICE PRIOR TO START OF CONSTRUCTION.

Utility Note

EXISTING UTILITIES ARE SHOWN TO APPROXIMATE LOCATION. FIELD VERIFY EXACT LOCATION OF EXISTING UTILITIES AND UTILITY CROSSINGS.

6/11/2019

DATE	REVISIONS
.	.
.	.
.	.
.	.

COOK & ASSOCIATES ENGINEERING INC.
• Engineering • Surveying • Geotechnical • Construction Management •
www.cook-eng.com
1486 East Poplar Street
Fort Gibson, OK 74434
918.478.3930 Office
918.478.5498 Fax
Certificate of Authorization #4479 Expires June 30, 2020

N W E S
50' 0' 50' 100'

STONEBROOK

Part of Section 13, T-17-N, R-15-E
Coweta, Oklahoma

Paving Plan

SCALE:	DESIGN	DATE	DRAWN	DATE
HORZ. .				
VERT. .	CHK'D BY	DATE	APPROVED	DATE
	.	.	.	.
DRAWING NAME:	SHEET 5 OF 11		PROJECT NO.	

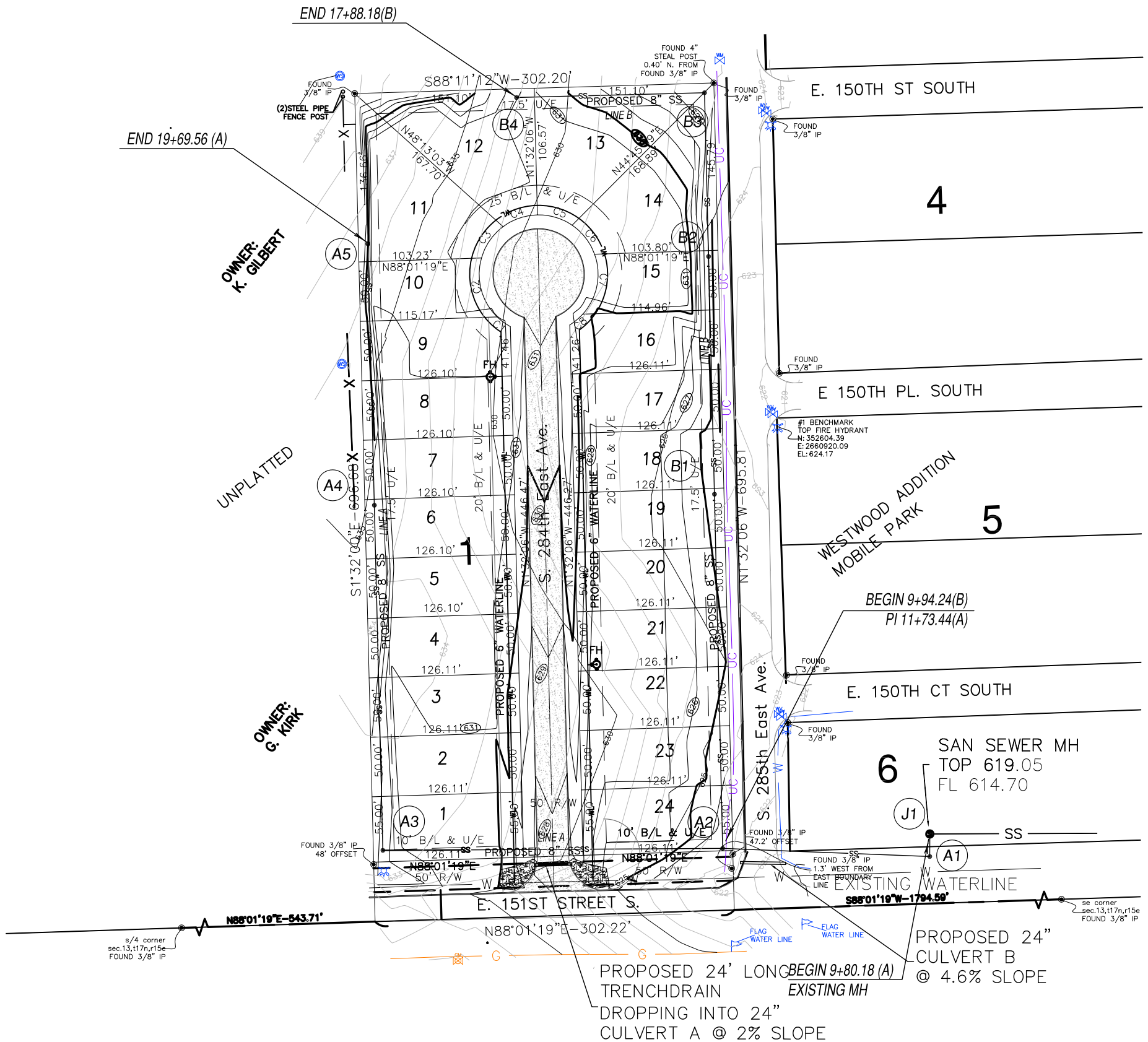

Sanitary Sewer Profile Legend

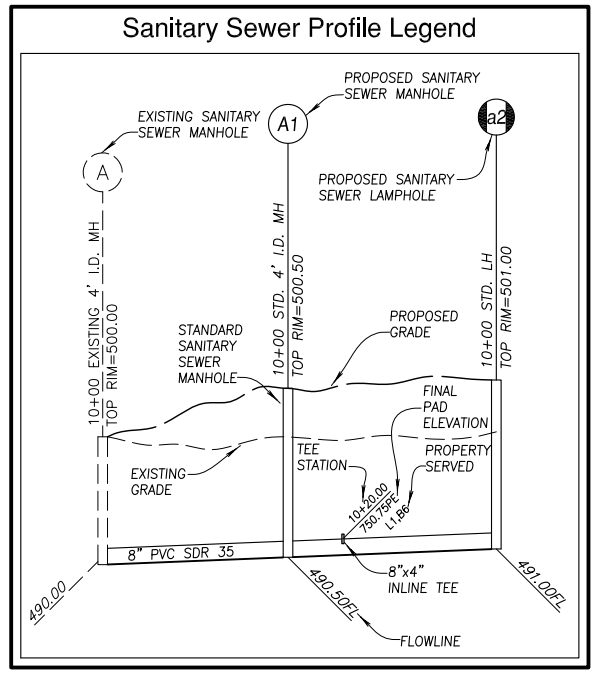

Sanitary Sewer Notes

1. ALL SANITARY SEWER COLLECTION SYSTEMS SHALL BE DESIGNED IN ACCORDANCE WITH THE CURRENT CITY OF COWETA LAND SUBDIVISION CODE AND CONSTRUCTED IN ACCORDANCE WITH THE CURRENT CITY OF COWETA STANDARD CONSTRUCTION SPECIFICATIONS.

2. THE CONTRACTOR SHALL FURNISH CERTIFICATION FROM THE MANUFACTURER/SUPPLIER THAT ALL MATERIALS MEET APPLICABLE SPECIFICATIONS. CERTIFICATIONS SHALL BE SUPPLIED IN FIVE (5) COPIES WITH THREE (3) COPIES STAMPED AND APPROVED, BY THE CITY, RETURNED TO THE CONTRACTOR. MATERIALS SHALL NOT BE INSTALLED UNTIL THEY HAVE BEEN APPROVED BY THE CITY.

3. ALL SANITARY SEWER COLLECTION SYSTEM CONSTRUCTION SHALL BE INSPECTED BY THE ENGINEERING / CONSTRUCTION UTILITY INSPECTORS, IN ACCORDANCE WITH CITY OF COWETA.

4. C900 PVC PIPE SHALL BE USED AT ANY POINT WHERE CONCRETE ENCASEMENT IS SPECIFIED, OR WHERE A WATER MAIN IS WITHIN TWO (2) FEET OF THE SEWER.

5. ALL TAPS SHALL BE INSTALLED DURING LATERAL CONSTRUCTION.

6. SPECIAL RISERS SHALL BE INSTALLED FOR EACH LOT WHERE THE MAIN SEWER DEPTH WILL BE FIFTEEN (15) FEET OR GREATER BELOW FINISHED GRADE.

7. BEDDING, BACKFILL, AND COMPACTION SHALL BE IN ACCORDANCE WITH STANDARD DRAWINGS. STREET BACKFILL AND COMPACTION REQUIREMENTS SHALL EXTEND TWO (2) FEET BACK OF CURB. WHEN REPLACING A SEWER IN SERVICE 3/8 INCH CHIPS SHALL BE USED FOR BEDDING AND INITIAL BACKFILL.

8. TAPS ON EXISTING LINES, THAT DID NOT HAVE TAPS INSTALLED DURING CONSTRUCTION, SHALL BE INSTALLED IN ACCORDANCE WITH STANDARD DRAWING.

9. WHEN WORKING IN OR ADJACENT TO EXISTING SUBDIVISIONS ONLY ONE (1) DAYS WORTH OF TRENCH MAY BE OPEN AT A GIVEN TIME. THIS REQUIREMENT MAY BE MODIFIED, IN WRITING BY ENGINEERING INSPECTORS DIVISION CHIEF, FOR A SPECIFIC PROJECT.

10. ROAD CLOSURES MUST BE COORDINATED A MINIMUM OF TWENTY FOUR (24) HOURS IN ADVANCE. ROADS WILL NOT BE CLOSED FOR OVER EIGHT (8) HOURS WITHOUT WRITTEN PERMISSION FROM THE ENGINEERING / CONSTRUCTION DIRECTOR.

11. DIG THROUGH LOCATOR TAPE WILL BE BURIED 2 FEET ABOVE THE SEWER LINE.

12. SERVICE LINES RUNNING ACROSS ROADWAYS SHALL BE SCHEDULE 40 PVC, FLOWFILLED IN PLACE.

NOTES:

1. ASTM C1244 STANDARD TEST METHOD FOR CONCRET SEWERMANHOLES BY NEGATIVE AIR PRESSURE (VACCUUM TEST) MUST BE USED FOR ALL MANHOLE TESTING.

2. DEFLECTION TESTS MUST BE PERFORMED ON ALL FLEXIBLE PIPE AFTER THE FINAL BACKFILL HAS BEEN IN PLACE AT LEAST 30 DAYS. DEFLECTION MUST NOT EXCEED 5% PER ASTM D3034 STANDARD TESTS

3. LEAKAGE TESTS ARE REQUIRED FOR ALL GRAVITY LINES. HYDROSTATIC TESTS MUST USE A 2- FOOT TEST HEAD AND LEAKAGE INWARD OR OUTWARD MUST NOT EXCEED 10 GALLONS PER INCH OF PIPE DIAMETER PER MILE PER DAY PER ASTM F1417-98 STANDARD TEST

Utility Note

EXISTING UTILITIES ARE SHOWN TO APPROXIMATE LOCATION. FIELD VERIFY EXACT LOCATION OF EXISTING UTILITIES AND UTILITY CROSSINGS.

CITY OF COWETA STANDARD CONSTRUCTION SPECIFICATIONS SHALL GOVERN ALL CONSTRUCTION.

Call Okie

48 HOURS BEFORE YOU DIG! CALL OKIE 1-800-522-6543
UTILITIES LOCATION SHOWN ON PLAN AND PROFILE WERE OBTAINED FROM INFORMATION PROVIDED BY UTILITY SYSTEM OWNER IN CONJUNCTION WITH EXISTING PHYSICAL FEATURES VISIBLE AT THE TIME OF THE TOPOGRAPHIC SURVEY. LOCATIONS MUST BE VERIFIED BY THE CONTRACTOR PRIOR TO CONSTRUCTION.

REGISTERED PROFESSIONAL ENGINEER
KATHLEEN A. COOK
21126
OKLAHOMA

3/08/2019

DATE	REVISIONS
.	.
.	.
.	.

COOK & ASSOCIATES ENGINEERING INC.
• Engineering • Surveying • Geotechnical • Construction Management •
www.cook-eng.com
1486 East Poplar Street
Fort Gibson, OK 74434
918.478.3930 Office
918.478.5498 Fax
Certificate of Authorization #4479 Expires June 30, 2020

N W E S
50' 0' 50' 100'

STONEBROOK

Part of Section 13, T-17-N, R-15-E
Coweta Oklahoma

Sanitary Sewer Plan

SCALE:	DESIGN	DATE	DRAWN	DATE
HORZ. .				
VERT. .	CHK'D BY	DATE	APPROVED	DATE
	.	.	.	.
DRAWING NAME:	SHEET 6 OF 11		PROJECT NO.	

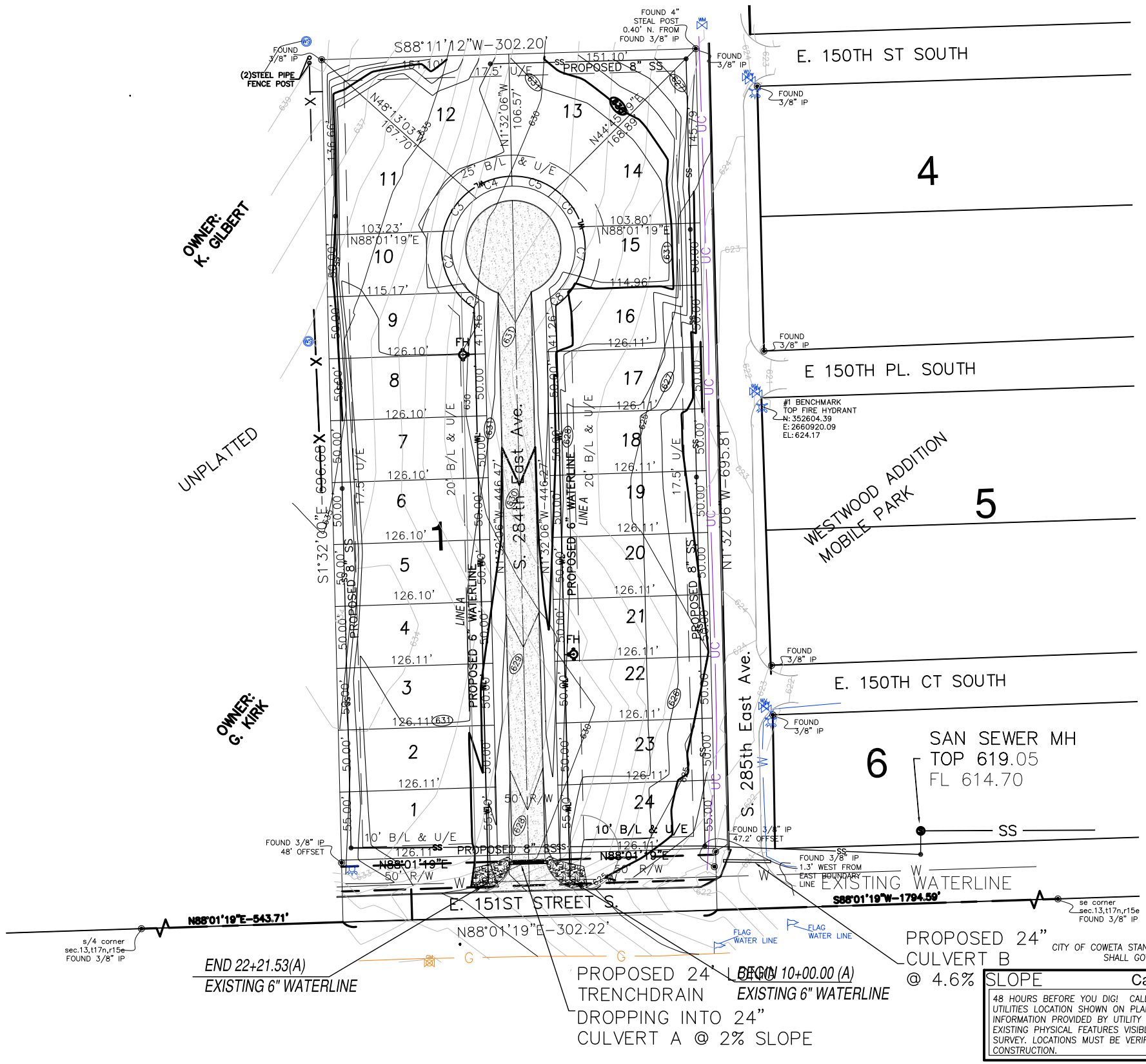

CITY OF COWETA STANDARD CONSTRUCTION SPECIFICATIONS SHALL GOVERN ALL CONSTRUCTION.

Water Line Notes

1. ALL WATER DISTRIBUTION SYSTEMS SHALL BE DESIGNED IN ACCORDANCE WITH THE CURRENT CITY OF COWETA LAND SUBDIVISION CODE AND CONSTRUCTED IN ACCORDANCE WITH THE CURRENT CITY OF COWETA STANDARD CONSTRUCTION SPECIFICATIONS.
2. THE CONTRACTOR SHALL FURNISH CERTIFICATION FROM THE MANUFACTURER/SUPPLIER THAT ALL MATERIALS MEET APPLICABLE SPECIFICATIONS. CERTIFICATIONS SHALL BE SUPPLIED IN FIVE (5) COPIES WITH THREE (3) COPIES STAMPED AND APPROVED, BY THE CITY, RETURNED TO THE CONTRACTOR. MATERIALS SHALL NOT BE INSTALLED UNTIL THEY HAVE BEEN APPROVED BY THE CITY.
3. ALL WATER DISTRIBUTION SYSTEM CONSTRUCTION SHALL BE INSPECTED BY THE ENGINEERING DEPARTMENT UTILITY INSPECTORS, IN ACCORDANCE WITH CITY OF COWETA ADMINISTRATIVE REGULATION.
4. DIG THROUGH LOCATOR TAPE WILL BE BURIED 2 FEET ABOVE THE LINE.
5. WHEN C-900 PVC IS USED, A NO. 8 BARE COPPER WIRE SHALL BE TAPED TO THE TOP SURFACE OF THE PIPE AND CONNECTED TO EACH FIRE HYDRANT BY ATTACHING TO A BOLT, JUST ABOVE GROUND LEVEL.
6. ALL IRON PIPE AND FITTINGS SHALL BE POLYWRAPPED.
7. STREET CROSSINGS FOR MAIN LINES TWELVE (12) INCHES AND LARGER, SHALL BE PLACED IN CONDUIT.
8. STREET CROSSINGS ACROSS EXISTING ARTERIALS SHALL BE BORED. CONDUIT SHALL BE INSTALLED, IN THE BORING, FOR ALL MAIN LINES FOUR (4) INCHES AND LARGER. ARTERIALS WILL BE OPEN CUT ONLY WITH THE PRIOR WRITTEN APPROVAL OF THE PUBLIC WORKS DIRECTOR.
9. ALL DISTRIBUTION LINES IN CONDUIT AND AT DRAINAGE FEATURE CROSSINGS SHALL BE CONSTRUCTED WITH RESTRAINED JOINTS.
10. ALL MAIN LINES SHALL HAVE A MINIMUM OF THREE (3) FEET AND A MAXIMUM OF EIGHT (8) FEET OF COVER.
11. BEDDING, BACKFILL, AND COMPACTION OVER WATER LINES SHALL BE IN ACCORDANCE WITH STANDARD DRAWING W01. BACKFILL AND COMPACTION REQUIREMENT FOR STREETS SHALL EXTEND TWO (2) FEET BACK OF CURB.
12. ALL WATER DISTRIBUTION SYSTEM LINES, EXCEPT DEAD END FOR FIRE HYDRANTS ONLY, SHALL BE LOOPED TO PROVIDE CIRCULATION.
13. DISTRIBUTION LINES SMALLER THAN FOUR (4) INCHES SHALL NOT BE INSTALLED.
14. SERVICE LINES SHALL BE TAPPED TO MAIN LINES USING SOLID BRASS SADDLES.
15. SERVICE LINES SHALL BE SEAMLESS COPPER WATER TUBE MEETING THE REQUIREMENTS OF ASTM-B88.
16. ALL SERVICE LINE FITTINGS SHALL BE BRASS WITH FLARED, COMPRESSION, SOLDERED, OR THREADED CONNECTIONS.
17. WHEN CONDUIT IS PROVIDED FOR SERVICE LINES IT SHALL BE SCHEDULE 40 PVC OR STRONGER.
18. FIRE HYDRANTS:
A. FIRE HYDRANTS SHALL BE MUELLER CENTURIAN OR AN APPROVED EQUAL.
B. EACH HYDRANT SHALL BE SET WITH THE STREAMER NOZZLE FACING THE STREET AND WITH A MINIMUM CLEARANCE OF EIGHTEEN (18) INCHES ABOVE THE FINISHED GRADE.
C. ALL EXPOSED PORTIONS OF FIRE HYDRANTS SHALL BE PAINTED WITH A BRIGHT RED ENAMEL AS MANUFACTURED BY GLIDDEN OR DUPONT.
19. WHEN WORKING IN OR ADJACENT TO EXISTING SUBDIVISIONS ONLY ONE (1) DAYS WORTH OF TRENCH MAY BE OPEN AT A GIVEN TIME. THIS REQUIREMENT MAY BE MODIFIED, IN WRITING BY THE ENGINEERING INSPECTORS DIVISION CHIEF, FOR A SPECIFIC PROJECT.
20. ROAD CLOSURES MUST BE COORDINATED A MINIMUM OF TWENTY FOUR (24) HOURS IN ADVANCE. ROADS WILL NOT BE CLOSED FOR OVER EIGHT (8) HOURS WITHOUT WRITTEN PERMISSION FROM THE ENGINEERING INSPECTORS DIVISION CHIEF.

Waterline Note

ALL WATERLINES TO BE 8' FROM ROW (PROPERTY) LINE (4' FROM BACK OF CURB).

CONTRACTOR TO ELIMINATE 11.25° AND 22.5° BENDS IF MANUFACTURER'S RECOMMENDED ALLOWABLE JOINT DEFLECTION WILL ALLOW FIELD DEFLECTING TO MATCH THE CURB ALIGNMENT.

CONTRACTOR MAY ALSO PLACE WATERLINES BETWEEN STORM STRUCTURES AND RIGHT OF WAY USING MANUFACTURER'S ALLOWABLE PIPE JOINT DEFLECTIONS (INSTEAD OF PLACING DIRECTLY UNDER STRUCTURE).

Waterline Overall Quantities

Item	Quantity
TAPPING SLEEVE & VALVE	2
3 WAY FH ASSEMBLY (6")	2
6" 45° BEND	2

NOTES:

1. IN ACCORDANCE WITH OAC 252.626-19-2(e), "TEST THE INSTALLED PIPE FOR LEAKAGE IN ACCORDANCE WITH AWWA STANDARDS SPECIFICATIONS. LEAKAGE MUST NOT EXCEED 10 GAL/INCH DIAMETER PER MILE OF PIPE PER 24 HOURS AT 150 PSI TESTING PRESSURE.

2. IN ACCORDANCE WITH OAC 252.626-19-2(f), "DISINFECT ALL WATERLINES ACCORDING TO CONSECUTIVE DAYS BEFORE PLACING THE WATERLINE IN SERVICE.

3. IN ACCORDANCE WITH OAC 252.626-19-2(h), PROVIDE THE FOLLOWING MINIMUM SEPARATION DISTANCES BETWEEN WATER LINES AND OTHER UTILITIES:

A. MEASURE THE SEPARATION DISTANCE EDGE TO EDGE

B. TEN FEET HORIZONTALLY FROM SEWER LINES.

C. TWO FEET VERTICALLY FROM SEWER LINE WITH SEWER LINES ARRANGED SO THAT ITS JOINTS WILL BE EQUIDISTANT FROM THE WATER LINE.

D. MAINTAIN A MINIMUM OF TWO FEET OF VERTICAL SEPARATION BETWEEN THE WATER LINE AND ANY EXISTING OR PROPOSED STORM SEWERS, RAW WATER LINES, PETROLEUM PRODUCT LINES, NATURAL GAS LINES AND OTHER BURIED UTILITIES.

E. FIVE FEET HORIZONTALLY FROM EXISTING OR PROPOSED STORM SEWERS, RAW WATER LINES, PETROLEUM PRODUCT LINES, NATURAL GAS LINES AND OTHER BURIED UTILITIES.

F. LOCATE CAST IRON WATER LINES AT LEAST 10 FEET FROM ANY GASOLINE STORAGE TANKS AND PVC WATER LINES AT LEAST 50 FEET HORIZONTALLY FROM ANY GASOLINE STORAGE TANKS AND LINES.

G. FIFTEEN FEET FROM ALL PARTS OF SEPTIC TANKS, ADSORPTION FIELDS OR OTHER SEWAGE TREATMENT AND DISPOSAL SYSTEMS.

4. IN ACCORDANCE WITH OAS 252-19-2(j), "INSTALL METAL TRACER WIRE ON ALL NONFERROUS PIPING USED FOR PUBLIC WATER SUPPLY MAINS.

REGISTERED PROFESSIONAL ENGINEER
KATHLEEN A. COOK
21126
OKLAHOMA

12/12/2018

SLOPE — Call Okie

48 HOURS BEFORE YOU DIG! CALL OKIE 1-800-522-6543
UTILITIES LOCATION SHOWN ON PLAN AND PROFILE WERE OBTAINED FROM INFORMATION PROVIDED BY UTILITY SYSTEM OWNER IN CONJUNCTION WITH EXISTING PHYSICAL FEATURES VISIBLE AT THE TIME OF THE TOPOGRAPHIC SURVEY. LOCATIONS MUST BE VERIFIED BY THE CONTRACTOR PRIOR TO CONSTRUCTION.

Utility Note

EXISTING UTILITIES ARE SHOWN TO APPROXIMATE LOCATION. FIELD VERIFY EXACT LOCATION OF EXISTING UTILITIES AND UTILITY CROSSINGS.

DATE	REVISIONS
.	.
.	.
.	.

COOK & ASSOCIATES ENGINEERING INC.
• Engineering • Surveying • Geotechnical • Construction Management •
www.cook-eng.com
1486 East Poplar Street
Fort Gibson, OK 74434
918.478.3930 Office
918.478.5498 Fax
Certificate of Authorization #4479 Expires June 30, 2020

N W E S
50' 0' 50' 100'

STONEBROOK

Part of Section 13, T-17-N, R-15-E
Coweta Oklahoma

Waterline Plan

SCALE:	DESIGN	DATE	DRAWN	DATE
HORZ. .				
VERT. .	CHK'D BY	DATE	APPROVED	DATE
	.	.	.	.
DRAWING NAME:	SHEET 7 OF 11		PROJECT NO.	

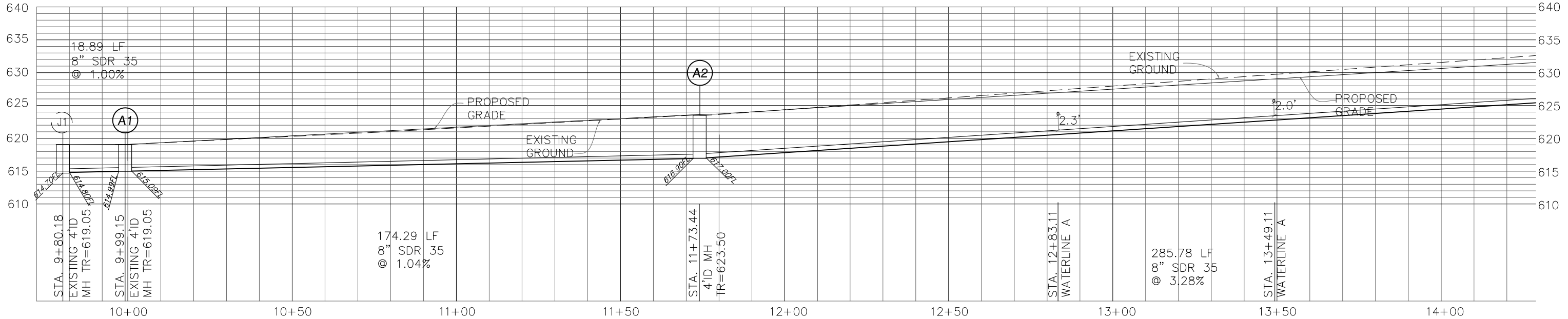

SANITARY SEWER LINE A PROFILE

SCALE HZ = 1"=30'
SCALE VT = 1"=15'

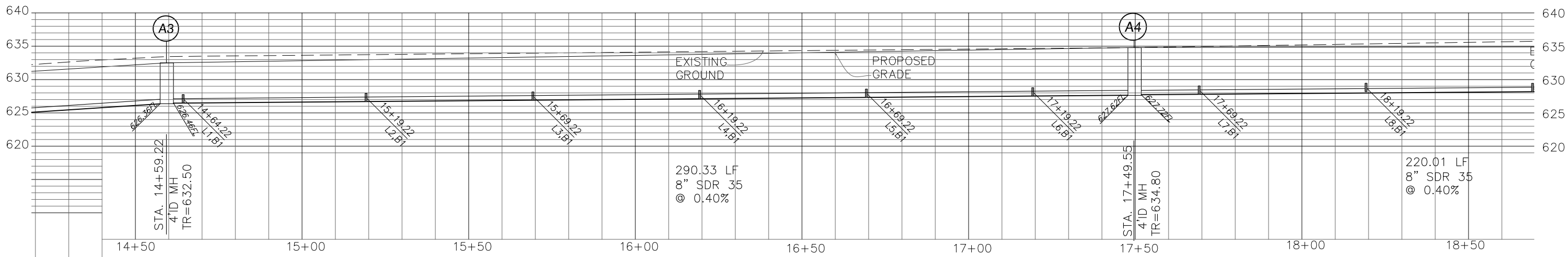

SANITARY SEWER LINE A PROFILE

SCALE HZ = 1"=30'
SCALE VT = 1"=15'

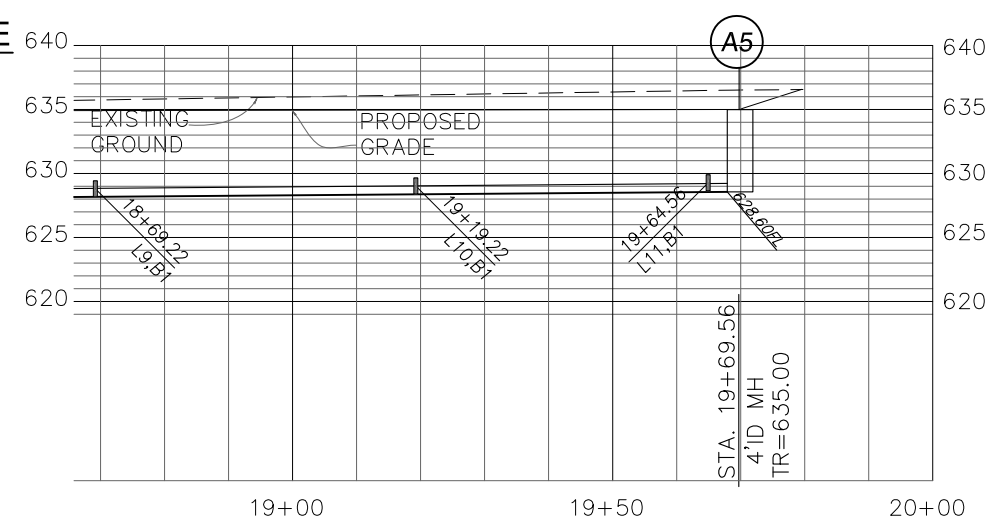

Utility Note

EXISTING UTILITIES ARE SHOWN TO APPROXIMATE LOCATION. FIELD VERIFY EXACT LOCATION OF EXISTING UTILITIES AND UTILITY CROSSINGS.

CITY OF COWETA STANDARD CONSTRUCTION SPECIFICATIONS SHALL GOVERN ALL CONSTRUCTION.

Call Okie

48 HOURS BEFORE YOU DIG! CALL OKIE 1-800-522-6543
UTILITIES LOCATION SHOWN ON PLAN AND PROFILE WERE OBTAINED FROM INFORMATION PROVIDED BY UTILITY SYSTEM OWNER IN CONJUNCTION WITH EXISTING PHYSICAL FEATURES VISIBLE AT THE TIME OF THE TOPOGRAPHIC SURVEY. LOCATIONS MUST BE VERIFIED BY THE CONTRACTOR PRIOR TO CONSTRUCTION.

REGISTERED PROFESSIONAL ENGINEER
KATHLEEN A. COOK
21126
OKLAHOMA

3/08/2019

DATE	REVISIONS
.	.
.	.
.	.

COOK & ASSOCIATES ENGINEERING INC.
• Engineering • Surveying • Geotechnical • Construction Management •
www.cook-eng.com
1486 East Poplar Street
Fort Gibson, OK 74434
918.478.3930 Office
918.478.5498 Fax
Certificate of Authorization #4479 Expires June 30, 2020

N W E S

STONEBROOK

Part of Section 13, T-17-N, R-15-E
Coweta Oklahoma

Utility Profiles

SANITARY SEWER LINE A

SCALE:	DESIGN	DATE	DRAWN	DATE
HORZ. .				
VERT. .	CHK'D BY	DATE	APPROVED	DATE
	.	.	.	.
DRAWING NAME:	SHEET 8 OF 11		PROJECT NO.	

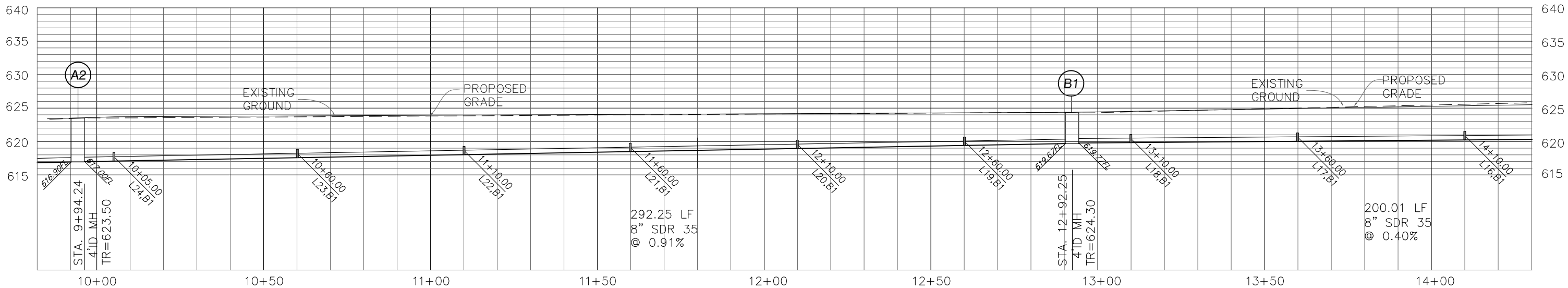

SANITARY SEWER LINE B PROFILE

SCALE HZ = 1"=30'
SCALE VT = 1"=15'

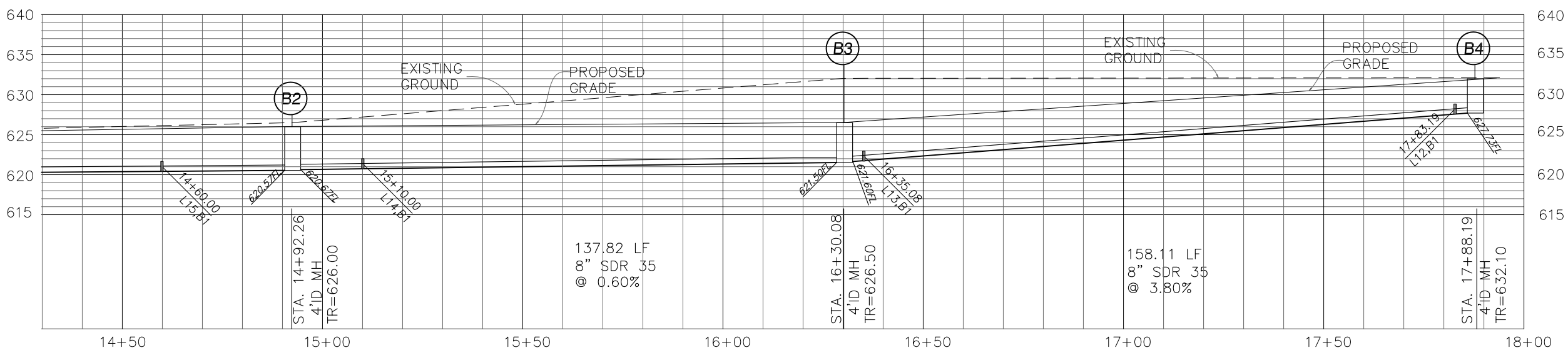

SANITARY SEWER LINE B PROFILE

SCALE HZ = 1"=30'
SCALE VT = 1"=15'

CITY OF COWETA STANDARD CONSTRUCTION SPECIFICATIONS SHALL GOVERN ALL CONSTRUCTION.

Utility Note

EXISTING UTILITIES ARE SHOWN TO APPROXIMATE LOCATION. FIELD VERIFY EXACT LOCATION OF EXISTING UTILITIES AND UTILITY CROSSINGS.

Call Okie

48 HOURS BEFORE YOU DIG! CALL OKIE 1-800-522-6543
UTILITIES LOCATION SHOWN ON PLAN AND PROFILE WERE OBTAINED FROM INFORMATION PROVIDED BY UTILITY SYSTEM OWNER IN CONJUNCTION WITH EXISTING PHYSICAL FEATURES VISIBLE AT THE TIME OF THE TOPOGRAPHIC SURVEY. LOCATIONS MUST BE VERIFIED BY THE CONTRACTOR PRIOR TO CONSTRUCTION.

REGISTERED PROFESSIONAL ENGINEER
KATHLEEN A. COOK
21126
OKLAHOMA

3/08/2019

DATE	REVISIONS
.	.
.	.
.	.

COOK & ASSOCIATES ENGINEERING INC.
• Engineering • Surveying • Geotechnical • Construction Management •
www.cook-eng.com
1486 East Poplar Street
Fort Gibson, OK 74434
918.478.3930 Office
918.478.5498 Fax
Certificate of Authorization #4479 Expires June 30, 2020

N W E S

STONEBROOK
Part of Section 13, T-17-N, R-15-E
Coweta Oklahoma

Utility Profiles
SANITARY SEWER LINE B

SCALE:	DESIGN	DATE	DRAWN	DATE
HORZ. .				
VERT. .	CHK'D BY	DATE	APPROVED	DATE
	.	.	.	.
DRAWING NAME:	SHEET 8a OF 11		PROJECT NO.	

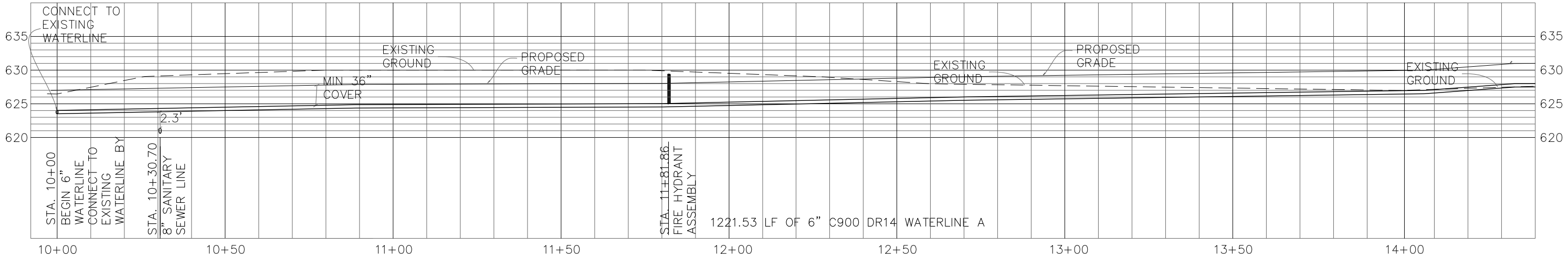

WATERLINE A PROFILE

SCALE HZ = 1"=30'
SCALE VT = 1"=15'

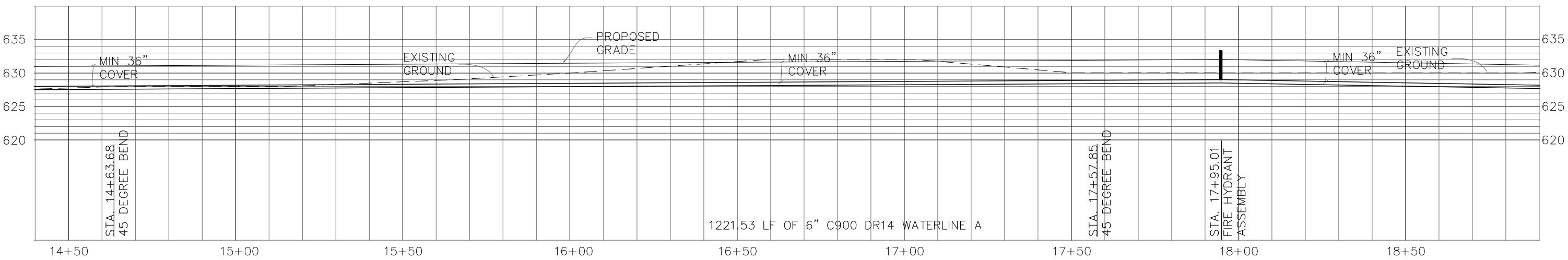

WATERLINE A PROFILE

SCALE HZ = 1"=30'
SCALE VT = 1"=15'

CITY OF COWETA STANDARD CONSTRUCTION SPECIFICATIONS SHALL GOVERN ALL CONSTRUCTION.

Call Okie

48 HOURS BEFORE YOU DIG! CALL OKIE 1-800-522-6543
UTILITIES LOCATION SHOWN ON PLAN AND PROFILE WERE OBTAINED FROM INFORMATION PROVIDED BY UTILITY SYSTEM OWNER IN CONJUNCTION WITH EXISTING PHYSICAL FEATURES VISIBLE AT THE TIME OF THE TOPOGRAPHIC SURVEY. LOCATIONS MUST BE VERIFIED BY THE CONTRACTOR PRIOR TO CONSTRUCTION.

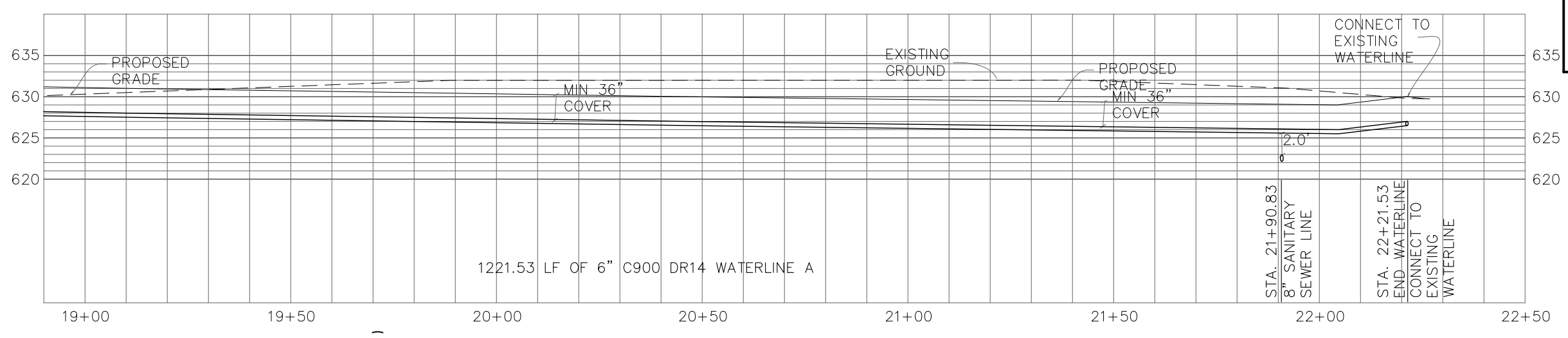

WATERLINE A PROFILE

SCALE HZ = 1"=30'
SCALE VT = 1"=15'

12/12/2018

DATE	REVISIONS
.	.
.	.
.	.

COOK & ASSOCIATES ENGINEERING INC.
• Engineering • Surveying • Geotechnical • Construction Management •
www.cook-eng.com
1486 East Poplar Street
Fort Gibson, OK 74434
918.478.3930 Office
918.478.5498 Fax
Certificate of Authorization #4479 Expires June 30, 2020

N W E S

STONEBROOK
Part of Section 13, T-17-N, R-15-E
Coweta Oklahoma

Utility Profiles
WATERLINE A

SCALE:	DESIGN	DATE	DRAWN	DATE
HORZ. .				
VERT. .	CHK'D BY	DATE	APPROVED	DATE
	.	.	.	.
DRAWING NAME:	SHEET 8b OF 11		PROJECT NO.	

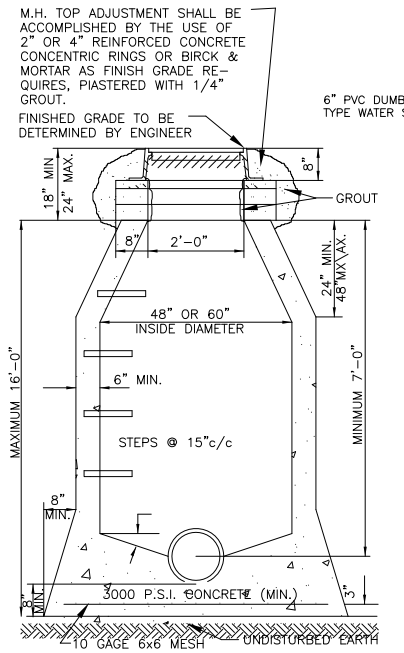

MONOLITHIC CONSTRUCTION

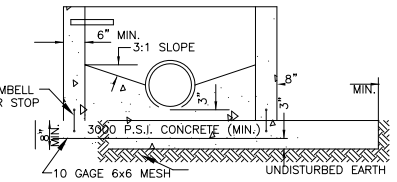

STAGE CONSTRUCTION
ALTERNATE 1

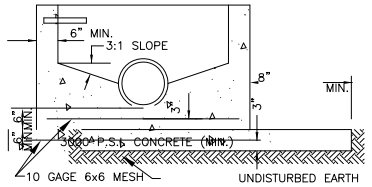

STAGE CONSTRUCTION
ALTERNATE 2

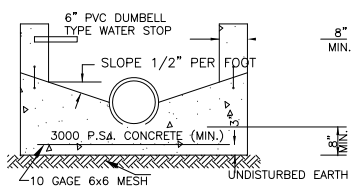

STAGE CONSTRUCTION
ALTERNATE 3

NOTES:

2. LOW SLUMP CONCRETE SHALL BE PLACED IN THE FOOTINGS AND LOWER WALLS, AND SHALL BE PLACED AND VIBRATED IN ONE FOOT LIFTS.
3. AN INSPECTOR MUST BE PRESENT BEFORE AND DURING THE PLACING OF THE CONCRETE.
4. THIS MANHOLE SHALL NOT BE USED IN PAVED STREETS OR OTHER TRAVELED AREAS.
5. THE CONCRETE MUST SET FOR 48 HOURS BEFORE PIPE INSIDE OF MANHOLE IS TRIMMED.
6. (ALTERNATE 3) INVERT MUST BE FORMED AT TIME OF BOTTOM POUR.
7. WATER STOPS MAY BE ELIMINATED IF BARREL OF MANHOLE IS POURED WITHIN 4 HOURS AFTER BASE IS CLEANED OF ALL MUD, SILT AND DEBRIS.
8. FLAT TOP AND ECCENTRIC TOP ACCEPTABLE.

CAST IN PLACE MANHOLE DETAIL

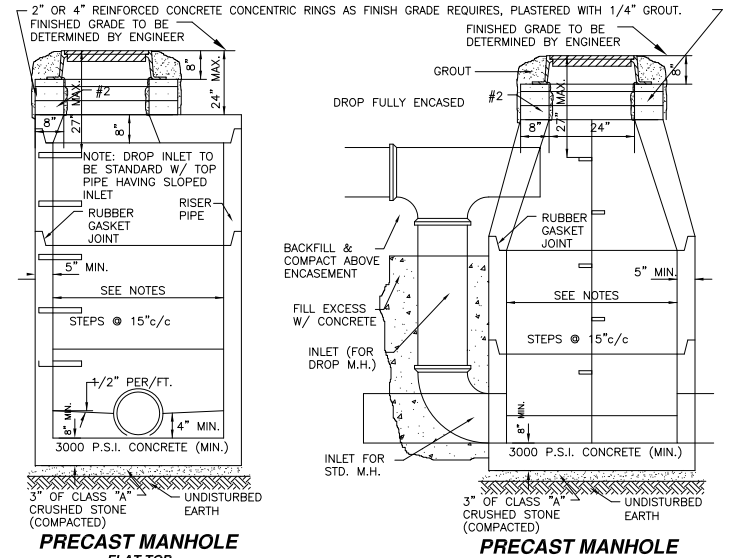

PRECAST MANHOLE
FLAT TOP

PRECAST MANHOLE
TAPERED TOP

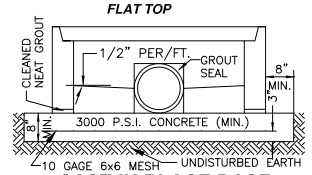

CAST-IN-PLACE BASE

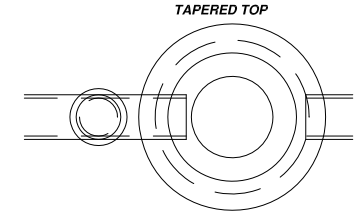

STANDARD & DROP MANHOLE

NOTES:
1. SHALL CONFORM TO CURRENT ASTM C478.
2. 8" TO 18" PIPE, 4' ID MANHOLE REQUIRED.
3. 21" TO 27" PIPE, 5' ID MANHOLE REQUIRED.
4. OVER 27" PIPE MANHOLE ID AS SPECIFIED BY ENGINEER.
5. MANHOLES LESS THAN 4'-6" IN HEIGHT SHALL HAVE A FULL 4'-0" ID OR LARGER FROM TOP TO BOTTOM.
6. JOINTS & LIFTING HOLES WILL BE GROUTED & COATED WITH MASTIC ON THE EXTERIOR.

PRECAST MANHOLE DETAIL

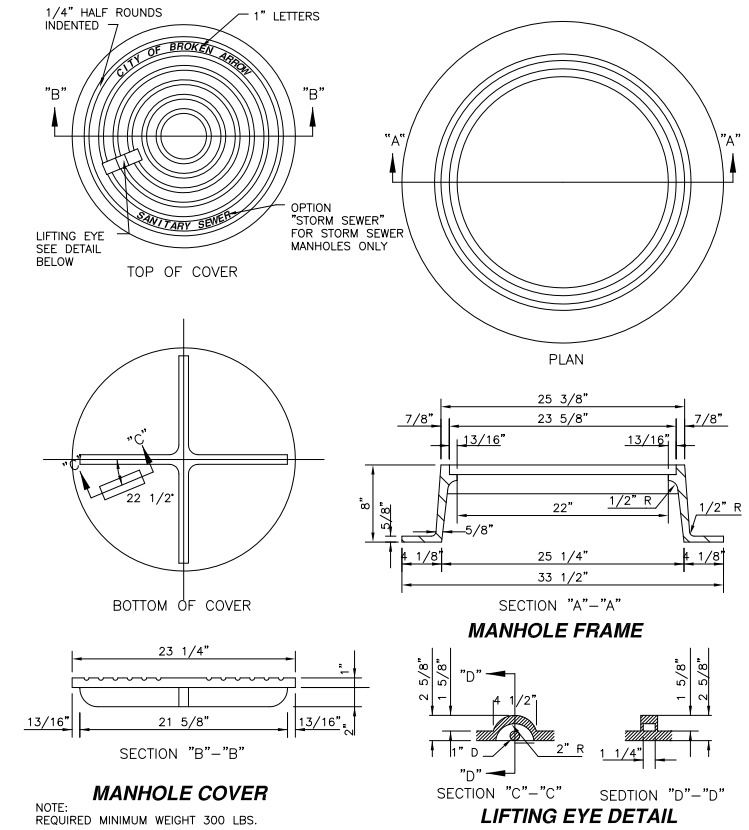

MANHOLE FRAME

MANHOLE COVER

NOTE:
REQUIRED MINIMUM WEIGHT 300 LBS.

LIFTING EYE DETAIL

MANHOLE FRAME AND COVER DETAIL

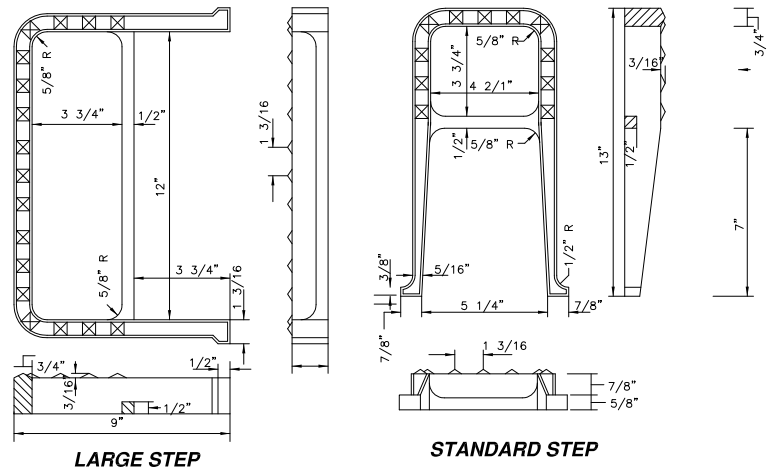

LARGE STEP

STANDARD STEP

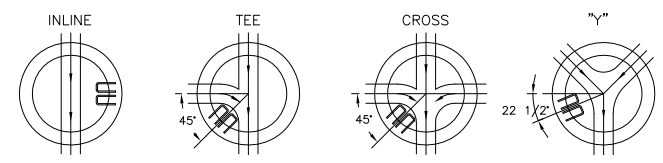

LOCATION OF MANHOLE STEPS

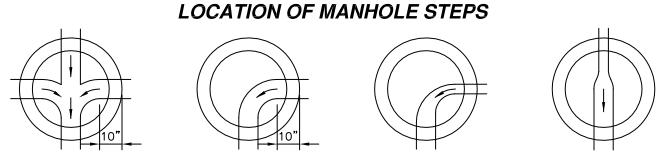

TYPICAL MANHOLE INVERT DETAIL

MANHOLE STEPS & INVERT DETAILS

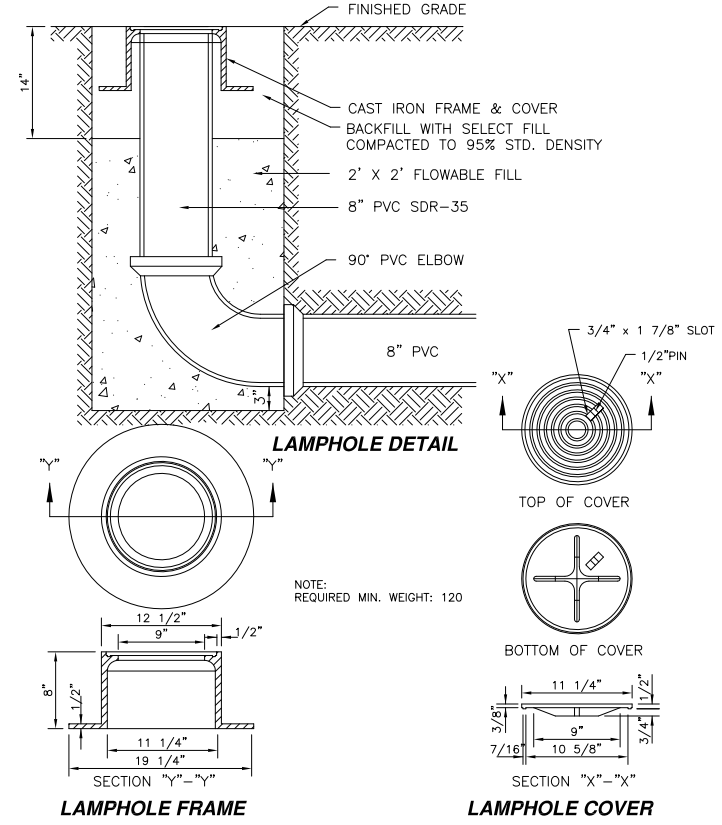

LAMPHOLE DETAIL

LAMPHOLE FRAME

LAMPHOLE COVER

LAMPHOLE, FRAME & COVER DETAIL

SEWER PIPE REQUIREMENTS

LOCATION/DEPTH	SIZE	PIPE TYPE	NOTES
≤ 30" cover	8"-12"	C-900 PVC DR18	Conc. Encase
≤ 30" cover	>12"	C-900 PVC DR18	Conc. Encase
31" to 15.9'	All	SDR 35 PVC	
16' to 25'	8"-15"	SDR 26 PVC	
16' to 25'	>15"	C-905 PVC DR18	
25' or deeper	8"-12"	C-900 PVC DR18	
25' or deeper	>12	C-905 PVC DR18	
Under Streets (open cut)	8"-12"	Same as required above	
Under Streets (bore)	All	SDR 35 PVC	
Creek Crossings	8"-12"	C-900 PVC DR18	Conc. Encase
Creek Crossings	>12"	C-905 PVC DR18	Conc. Encase
W.L. within 2' vertical	8"-12"	C-900 PVC DR18	
W.L. within 2' vertical	>12"	C-905 PVC DR18	
Service lines to 15' deep	4"-6"	Schedule 40	
Risers over 15' deep	4"-6"	Same as main line	

NOTES:
1.) Ultra-Rib Pipe can be substituted for SDR 35 on sizes 15" or larger

SEWER PIPE TABLE

DATE	REVISIONS
.	.
.	.
.	.
.	.

COOK & ASSOCIATES ENGINEERING INC.
• Engineering • Surveying • Geotechnical • Construction Management •
www.cook-eng.com
1486 East Poplar Street
Fort Gibson, OK 74434
918.478.3930 Office
918.478.5498 Fax
Certificate of Authorization #4479 Expires June 30, 2020

STONEBROOK
Part of Section 13, T-17-N, R-15-E
Coweta, Oklahoma

Sanitary Sewer Details

SCALE:	DESIGN	DATE	DRAWN	DATE
HORZ. .				
VERT. .	CHK'D BY	DATE	APPROVED	DATE
	.	.	.	.
DRAWING NAME:	SHEET 9 OF 11		PROJECT NO.	

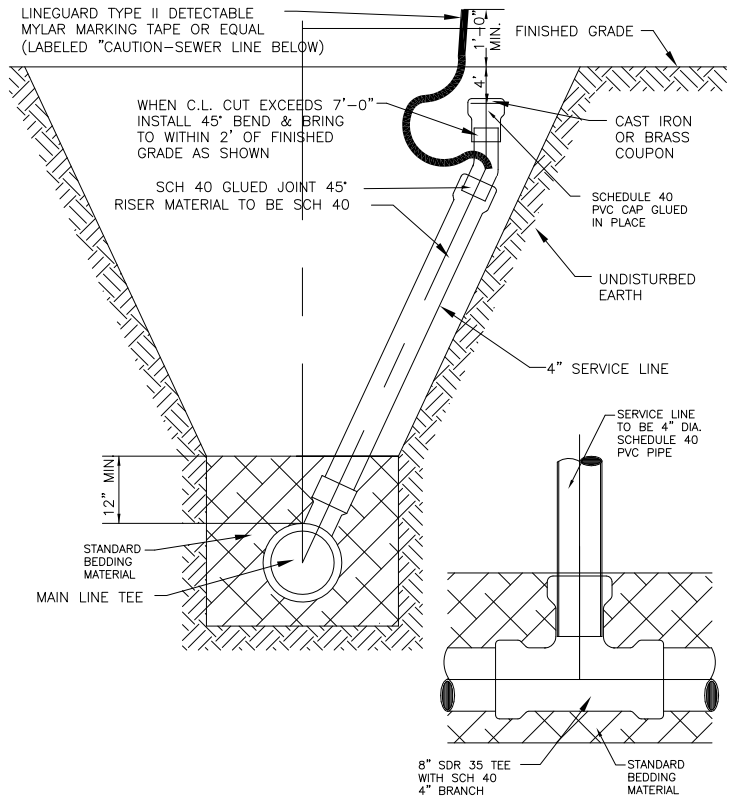

SANITARY SEWER RISER DETAIL
(NORMAL TRENCH)

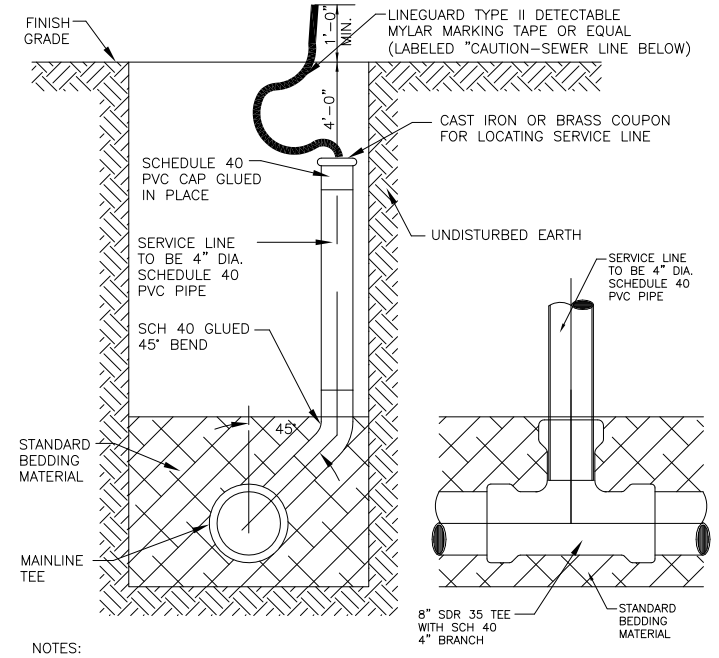

NOTES:
1. ALL NEW SANITARY SEWER LINES SHALL HAVE TAPS INSTALLED AS SHOWN ON THIS DETAIL FOR LINES UP TO 12 FEET DEEP.
2. THE TAP SHALL BE LOCATED AT THE FIRST JOINT AT LEAST FIVE (5) FEET UPSTREAM FROM THE DOWNSTREAM PROPERTY LINE. THE EXACT LOCATION SHALL BE NOTED ON THE AS–BUILT PLANS AS A DISTANCE IN FEET FROM THE NEAREST MANHOLE.

SANITARY SEWER TAP DETAIL
(NARROW TRENCH NEW CONSTRUCTION)

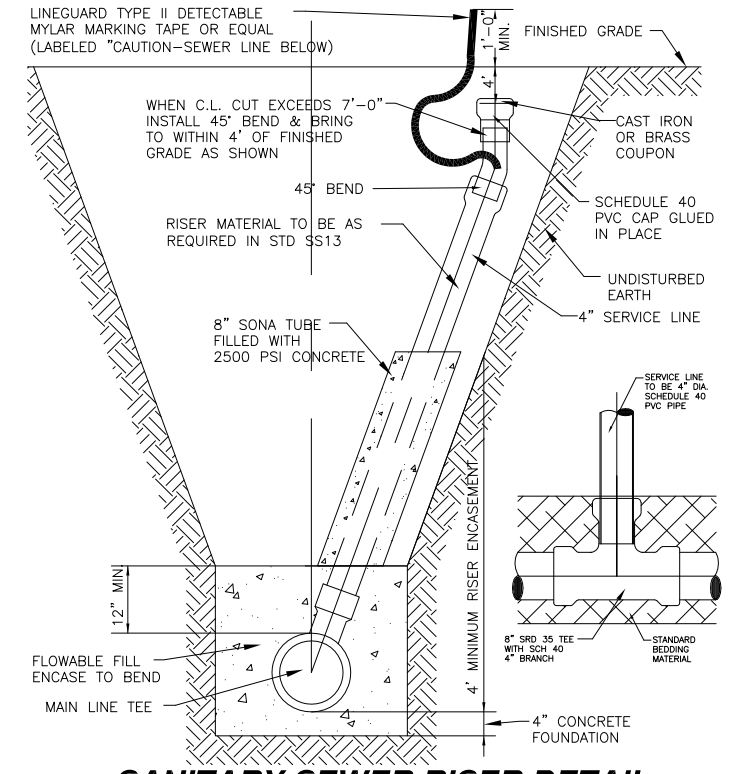

SANITARY SEWER RISER DETAIL OVER 15' DEEP
(WIDE TRENCH)

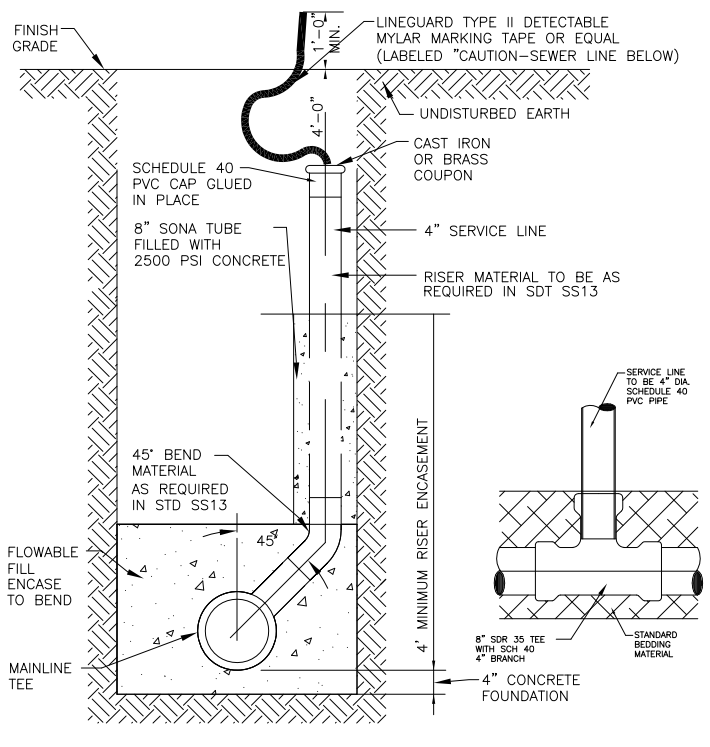

SANITARY SEWER RISER DETAIL OVER 15' DEEP
(NARROW TRENCH)

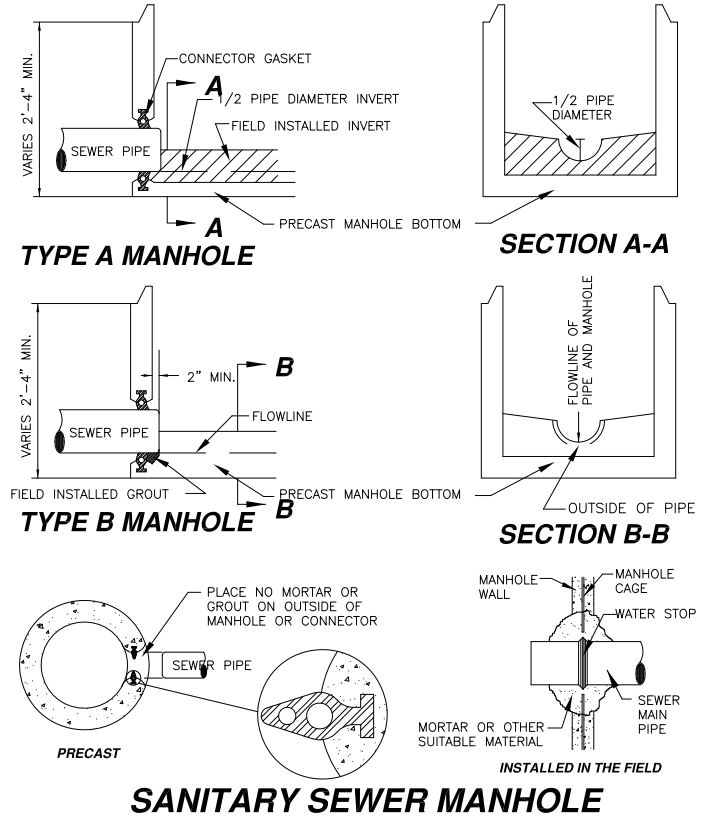

SANITARY SEWER MANHOLE PIPE CONNECTOR DETAILS

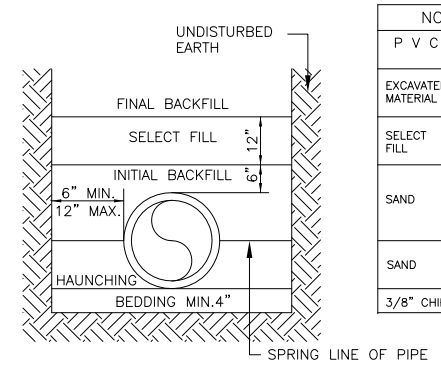

NON–PAVED AREAS		
P V C	DUCTILE IRON	CONCRETE
EXCAVATED MATERIAL	EXCAVATED MATERIAL	EXCAVATED MATERIAL
SELECT FILL	SELECT FILL	SELECT FILL
SAND	SAND	SAND
SAND	SAND	SAND
3/8" CHIPS	3/8" CHIPS	3/8" CHIPS

PAVED AREAS		
P V C	DUCTILE IRON	CONCRETE
CRUSHED ROCK	CRUSHED ROCK	CRUSHED ROCK
CRUSHED ROCK	CRUSHED ROCK	CRUSHED ROCK
3/8" CHIPS	3/8" CHIPS	3/8" CHIPS
3/8" CHIPS	3/8" CHIPS	3/8" CHIPS
3/8" CHIPS	3/8" CHIPS	3/8" CHIPS

NOTES:
1. SELECT FILL CONSISTS OF EXCAVATED MATERIALS CONTAINING NO ROCKS LARGER THAN 2 INCHES.
2. CRUSHED ROCK SHALL BE ODOT TYPE A ROCK.
3. BEDDING REQUIRED FOR ALL SANITARY SEWER REPLACEMENT PROJECTS IN ROCK EXCAVATION AND FOR LEVELING TRENCH IN NEW INSTALLATION.
4. COMPACTION REQUIREMENTS:
   a. NON–PAVED AREAS: 90% MAXIMUM STANDARD PROCTOR DENSITY FOR COHESIONLESS SOILS AND 85% FOR COHESIVE SOILS.
   b. PAVED AREAS: 95% MAXIMUM STANDARD PROCTOR DENSITY FOR COHESIONLESS SOILS.
5. FILLS OVER 10 FEET DEEP – MATERIAL IN THE AREA FROM SELECT FILL TO BEDDING SHALL BE 3/4" CRUSHER RUN, WELL GRADED.
6. FLOWABLE FILL MAY BE SUBSTITUTED FOR ALL MATERIALS IN ROAD CROSSING.

SANITARY SEWER PIPE BEDDING DETAIL

DATE	REVISIONS
.	.
.	.
.	.
.	.

COOK & ASSOCIATES ENGINEERING INC.
• Engineering • Surveying • Geotechnical • Construction Management •
www.cook-eng.com
1486 East Poplar Street
Fort Gibson, OK 74434
918.478.3930 Office
918.478.5498 Fax
Certificate of Authorization #4479 Expires June 30, 2020

STONEBROOK
Part of Section 13, T-17-N, R-15-E
Coweta, Oklahoma

Sanitary Sewer Details

SCALE:	DESIGN	DATE	DRAWN	DATE
HORZ. .				
VERT. .	CHK'D BY	DATE	APPROVED	DATE
	.	.	.	.
DRAWING NAME:	SHEET 10 OF 11		PROJECT NO.	

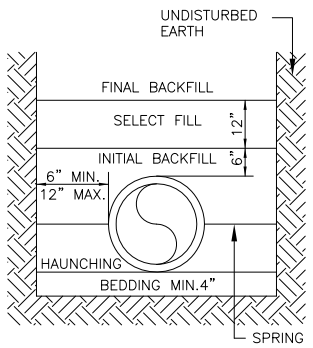

NON–PAVED AREAS		
P V C	DUCTILE IRON	CONCRETE
EXCAVATED MATERIAL	EXCAVATED MATERIAL	EXCAVATED MATERIAL
SELECT FILL	SELECT FILL	SELECT FILL
SELECT FILL	SELECT FILL	SELECT FILL
SELECT FILL	SELECT FILL	SELECT FILL
CLEAN SOIL NO ROCK LARGER THAN 3/8"		

PAVED AREAS		
P V C	DUCTILE IRON	CONCRETE
CRUSHED ROCK	CRUSHED ROCK	CRUSHED ROCK
CRUSHED ROCK	CRUSHED ROCK	CRUSHED ROCK
3/8" CHIPS	3/8" CHIPS	3/8" CHIPS
3/8" CHIPS	3/8" CHIPS	3/8" CHIPS
3/8" CHIPS	3/8" CHIPS	3/8" CHIPS

NOTES:
1. SELECT FILL CONSISTS OF EXCAVATED MATERIALS CONTAINING NO ROCKS LARGER THAN 2 INCHES.
2. CRUSHED ROCK SHALL BE ODOT TYPE A BASE
3. BEDDING REQUIRED ONLY FOR ROCK EXCAVATION.
4. COMPACTION REQUIREMENTS:
   a. NON– PAVED AREAS: 90% MAXIMUM STANDARD PROCTOR DENSITY FOR COHESIONLESS SOILS AND 85% FOR COHESIVE SOILS.
   b. PAVED AREAS: 95% MAXIMUM STANDARD PROCTOR DENSITY FOR COHESIONLESS SOILS.
5. FILLS OVER 10 FEET DEEP – MATERIAL IN THE AREA FROM SELECT FILL TO BEDDING SHALL BE 3/4" CRUSHER RUN WELL GRADED.
6. FLOWABLE FILL MAY BE SUBSTITUTED FOR ALL MATERIALS IN ROAD CROSSING.
7 PAVED AREA INCLUDES 2' BEHIND CURB.

WATER PIPE BEDDING DETAIL

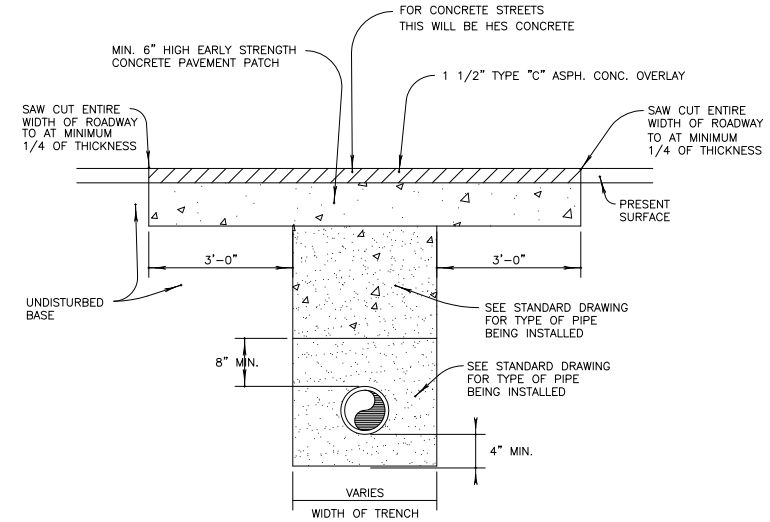

USE THIS DETAIL WHERE IT IS NECESSARY TO CUT THE PRESENT SURFACE FOR REMOVAL OR CONSTRUCTION OF AN UNDERGROUND FACILITY

NOTES:
1. CONCRETE TO BE PLACED ONE HALF OF ROADWAY AT A TIME AND CURED FOR THREE (3) DAYS.
2. NEW SURFACE TO TRANSITION SMOOTHLY TO EXISTING PAVEMENT.
3. STRENGTH OF PATCH MUST EQUAL OR EXCEED EXISTING STREET STRENGTH.

STREET PATCH DETAIL

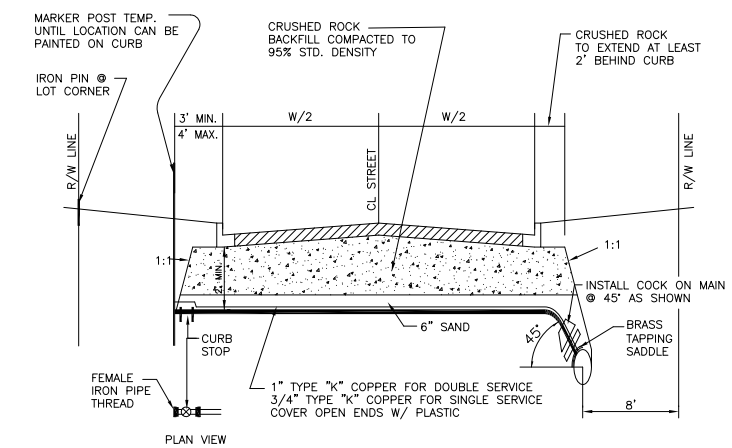

NOTES:
1. LOT CORNERS SHALL BE STAKED PRIOR TO CONSTRUCTION OF SERVICE LINES, CROSSING TO BE ON LOT LINE.
2. DETECTABLE MYLAR MARKING TAPE (LIFEGUARD TYPE II OR EQUAL) TO BE INSTALLED OVER COPPER SERVICE AS SHOWN.
3. CROSSING NOT REQUIRED IN LOOPED CUL–DE–SAC.
4. COPPER SHALL NOT BE SPLICED.
5. CROSSING TO BE INSPECTED BEFORE TRENCH IS BACKFILLED.
6. IF ROCK IS USED IN BACKFILL, COPPER SHALL BE PLACED IN SCHEDULE 40 PVC SLEEVE

WATER LINE STREET CROSSING DETAIL

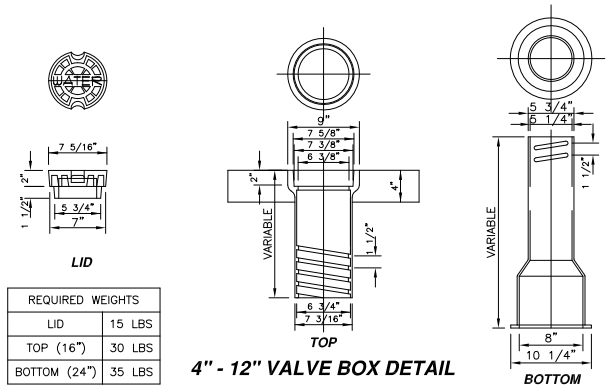

REQUIRED WEIGHTS	
LID	15 LBS
TOP (16")	30 LBS
BOTTOM (24")	35 LBS

4" - 12" VALVE BOX DETAIL

NOTES:
1. WATER LINE CONTRACTOR TO PLACE 2 FOOT SQUARE CONCRETE PAD AROUND EACH WATER VALVE AFTER FINAL GRADING HAS BEEN COMPLETED AND TRENCHES HAVE SETTLED.
2. VALVE BOXES REQUIRING OVER 2 ADDITIONAL BOTTOM SECTIONS SHALL BE EXTENDED USING C900 DR14 PVC PIPE WITH A BOTTOM AND TOP SECTION PLACED ON TOP OF THE C900 DR14 PVC PIPE.

VALVE BOX DETAIL

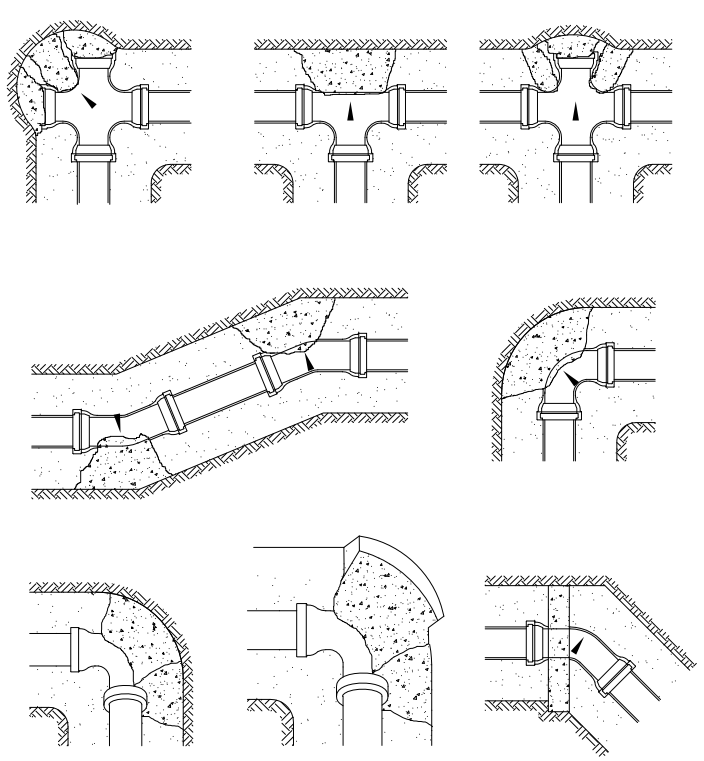

2" - 8" PIPE LARGER

THRUST BLOCK LOCATION DETAILS

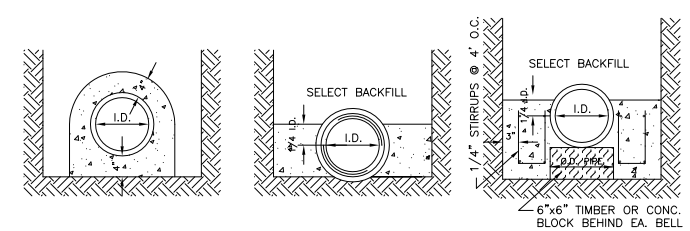

CONCRETE ENCASEMENT
CONCRETE PER LF

8" I.D.	DIP, HDPE	1.41 CF
10" I.D.	DIP, HDPE	1.67 CF
12" I.D.	DIP, HDPE	1.93 CF
15" I.D.	DIP, HDPE	2.36 CF
18" I.D.	DIP, HDPE	2.81 CF
21" I.D.	DIP, HDPE	3.27 CF
24" I.D.	DIP, HDPE	3.76 CF
27" I.D.	DIP, HDPE	4.26 CF
30" I.D.	DIP	4.78 CF
30" I.D.	HDPE	5.09 CF
36" I.D.	DIP, HDPE	5.80 CF
36" I.D.	HDPE	6.20 CF

CONCRETE CRADLE
CONCRETE PER LF

8" I.D.	DIP, HDPE	1.09 CF
10" I.D.	DIP, HDPE	1.23 CF
12" I.D.	DIP, HDPE	1.33 CF
15" I.D.	DIP, HDPE	1.66 CF
18" I.D.	DIP, HDPE	2.00 CF
21" I.D.	DIP, HDPE	1.96 CF
24" I.D.	DIP, HDPE	2.69 CF
27" I.D.	DIP, HDPE	3.52 CF
30" I.D.	DIP	3.38 CF
30" I.D.	HDPE	4.40 CF
36" I.D.	DIP, HDPE	4.12 CF
36" I.D.	HDPE	5.26 CF

WATER TABLE CRADLE
CONCRETE PER LF

8" I.D.	DIP, HDPE	2.34 CF
10" I.D.	DIP, HDPE	2.48 CF
12" I.D.	DIP, HDPE	2.58 CF
15" I.D.	DIP, HDPE	3.04 CF
18" I.D.	DIP, HDPE	3.50 CF
21" I.D.	DIP, HDPE	3.46 CF
24" I.D.	DIP, HDPE	4.44 CF
27" I.D.	DIP, HDPE	5.52 CF
30" I.D.	DIP	5.38 CF
30" I.D.	HDPE	6.65 CF
36" I.D.	DIP, HDPE	6.37 CF
36" I.D.	HDPE	7.76 CF

CONCRETE ENCASEMENT & CRADLES

NOTES:
1. ALL FINISHED SUB–GRADES SHALL BE PREPARED ACCURATELY BY MEANS OF HAND TOOLS.
2. TRENCH WIDTHS ARE DETAILED IN SPECIFICATION 311 EXCAVATION.

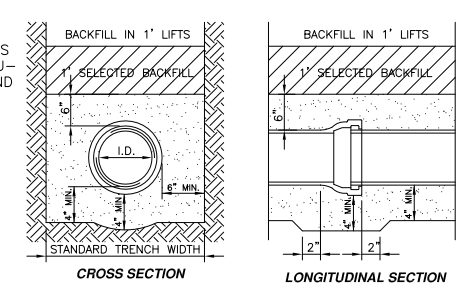

CROSS SECTION LONGITUDINAL SECTION

TRENCH CONDITIONS

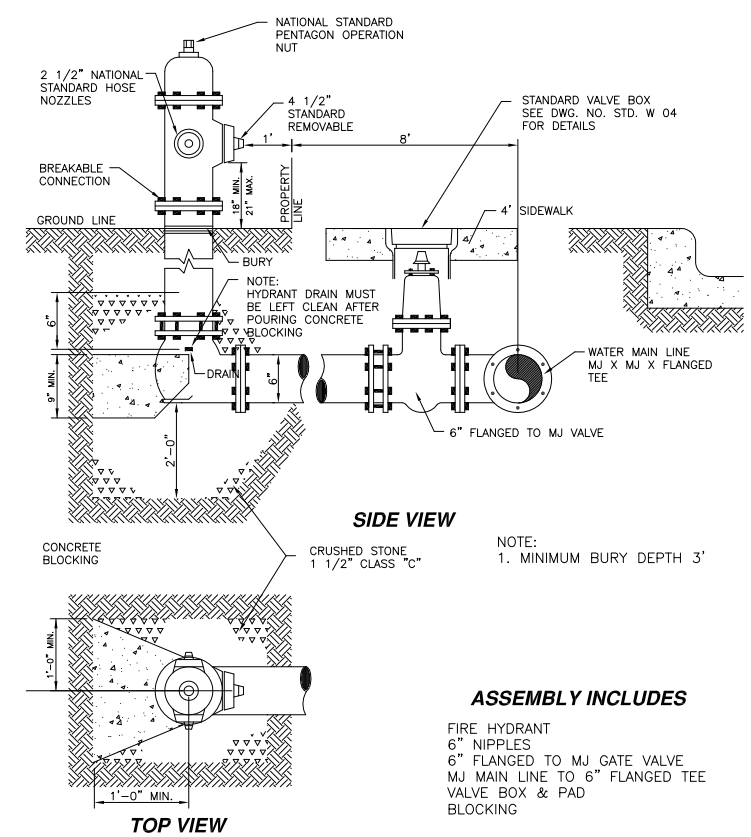

NOTE:
1. MINIMUM BURY DEPTH 3'

ASSEMBLY INCLUDES

FIRE HYDRANT
6" NIPPLES
6" FLANGED TO MJ GATE VALVE
MJ MAIN LINE TO 6" FLANGED TEE
VALVE BOX & PAD
BLOCKING

FIRE HYDRANT ASSEMBLY DETAIL

DATE	REVISIONS
.	.
.	.
.	.
.	.

COOK & ASSOCIATES ENGINEERING INC.
• Engineering • Surveying • Geotechnical • Construction Management •
www.cook-eng.com
1486 East Poplar Street
Fort Gibson, OK 74434
918.478.3930 Office
918.478.5498 Fax
Certificate of Authorization #4479 Expires June 30, 2020

N W E S

STONEBROOK
Part of Sec 13, T17N, R15E
COWETA, OKLAHOMA

WATERLINE DETAILS

SCALE:	DESIGN	DATE	DRAWN	DATE
HORZ. .				
VERT. .	CHK'D BY	DATE	APPROVED	DATE
	.	.	.	.
DRAWING NAME:	SHEET 11 OF 11		PROJECT NO.	

POST OFFICE BOX 850 * COWETA, OKLAHOMA 74429. PH. (918) 486-2189 FAX (918) 486-5366
www.cityofcoweta-ok.gov

AGENDA
TECHNICAL ADVISORY COMMITTEE MEETING
NO MEETING SEND

1. Discuss and consider a request by H2 Property Investments, Developer; Engineer/Surveyor: Cook & Associates Engineering, Inc., for Final Plat approval of Stonebrook, a subdivision of approximately 4.848 acres more or less with 24 lots, located in Section 13, Township 17 North, Range 15 East, of the Indian Base and Meridian, Wagoner County, State of Oklahoma. This land is zoned RS-3 (Residential Single Family).

Please fax a letter to me at 486-5366 with your comments regarding this request or I can also be reached via e-mail at tyoung@cityofcoweta-ok.gov

If you have any questions about this request please feel free to contact me at 486-2189.

Thank You

Tom E Young Jr.
City Planner
City of Coweta
918 279-7215
tyoung@cityofcoweta-ok.gov